Polo 1995 ➤

4-Cyl. injection engine (4 valve, roller rocker finger), Mechanics									
Engine ID	AJV								

Edition 06.1998

satelettronica

Protected by copyright. Copying for private or commercial purposes, in part or in whole, is not permitted unless authorised by Volkswagen AG. Volkswagen AG does not guarantee or accept any liability with respect to the correctness of information in this document. Copyright by Volkswagen AG.

List of Workshop Manual Repair GroupsList of Workshop Manual Repair GroupsList of Workshop Manual Repair Groups

Polo 1995 ➤

4-Cyl. injection engine (4 valve, roller rocker finger), Mechanics

Repair Group

00 - Technical data
10 - Removing and installing engine
13 - Crankshaft group
15 - Cylinder head, Valve gear
17 - Lubrication
19 - Cooling system
20 - Fuel supply system
26 - Exhaust system

Protected by copyright. Copying for private or commercial purposes, in part or in whole, is not permitted unless authorised by Volkswagen AG. Volkswagen AG does not guarantee or accept any liability with respect to the correctness of information in this document. Copyright by Volkswagen AG.

satelettronica

Technical information should always be available to the foremen and mechanics, because their careful and constant adherence to the instructions is essential to ensure vehicle road-worthiness and safety. In addition, the normal basic safety precautions for working on motor vehicles must, as a matter of course, be observed.

All rights reserved.
No reproduction without prior agreement from publisher.

Copyright © 2010 Volkswagen AG, Wolfsburg

Contents

00 - Technical data 1
1 Technical data 1
1.1 Technical data 1
1.2 Engine number 1
1.3 Engine data 1

10 - Removing and installing engine 3
1 Removing and installing engine 3
1.1 Removing and installing engine 3
1.2 Notes on removing 4
1.3 Securing engine to assembly stand 8
1.4 Notes on installing 8
1.5 Tightening torques 10
1.6 Assembly mountings 10
1.7 Additional information and removal instructions for vehicles with air conditioner 11

13 - Crankshaft group 13
1 Dismantling and assembling engine 13
1.1 Dismantling and assembling engine 13
1.2 Removing and installing ribbed belt 22
1.3 Checking valve timing 23
1.4 Removing, installing and tensioning toothed belts 25
1.5 Checking semi-automatic toothed belt tensioning roller 32
2 Dismantling and assembling cylinder block, crankshaft and flywheel 36
2.1 Dismantling and assembling cylinder block, crankshaft and flywheel 36
2.2 Crankshaft dimensions 39
2.3 Renewing crankshaft oil seal -belt pulley end- 40
2.4 Renewing crankshaft sealing flange -flywheel end- 42
3 Dismantling and assembling pistons and conrods 51
3.1 Dismantling and assembling pistons and conrods 51
3.2 Piston and cylinder dimensions 56

15 - Cylinder head, Valve gear 57
1 Removing and installing cylinder head 57
1.1 Removing and installing cylinder head 57
1.2 Removing and installing camshaft housing 61
1.3 Removing and installing cylinder head 64
1.4 Checking compression pressures 71
2 Servicing valve gear 73
2.1 Servicing valve gear 73
2.2 Reworking valve seats 81
2.3 Renewing camshaft oil seals 83
2.4 Checking valve guides 85
2.5 Renewing valve guides 86
2.6 Renewing valve stem seals 88

17 - Lubrication 91
1 Removing and installing parts of the lubrication system 91
1.1 Removing and installing parts of the lubrication system 91
1.2 Removing and installing oil sump 97
1.3 Removing and installing oil pump 99
1.4 Checking oil pressure and oil pressure switch 102

19 - Cooling system 104

Copyright by Volkswagen AG. Volkswagen AG does not guarantee or accept any liability with respect to the correctness of information in this document. Copyright by Volkswagen AG
satelettronica

1 Removing and installing parts of cooling system . . . 104
1.1 Removing and installing parts of cooling system . . . 104
1.2 Parts of cooling system body side . . . 105
1.3 Parts of cooling system engine side . . . 108
1.4 Coolant hose connection diagram . . . 113
1.5 Draining and filling cooling system . . . 115
1.6 Removing and installing radiator . . . 117
1.7 Removing and installing coolant pump . . . 119

20 - Fuel supply system . . . 121
1 Removing and installing parts of fuel supply system . . . 121
1.1 Removing and installing parts of fuel supply system . . . 121
1.2 Removing and installing fuel tank with its attachments and fuel filter . . . 122
1.3 Safety precautions when working on the fuel supply system . . . 127
1.4 Rules for cleanliness . . . 127
1.5 Removing and installing fuel delivery unit . . . 128
1.6 Removing and installing fuel tank . . . 129
1.7 Checking fuel pump . . . 130
2 Accelerator mechanism . . . 137
2.1 Accelerator mechanism . . . 137
2.2 Servicing accelerator mechanism . . . 137
2.3 Adjusting throttle cable . . . 138
3 Activated charcoal filter system . . . 138
3.1 Activated charcoal filter system . . . 138
3.2 Removing and installing parts of the activated charcoal filter system . . . 139
3.3 Checking fuel tank breather . . . 141

26 - Exhaust system . . . 143
1 Removing and installing parts of exhaust system . . . 143
1.1 Removing and installing parts of exhaust system . . . 143
1.2 Exhaust manifold, front exhaust pipe and catalyst with attachments . . . 143

Protected by copyright. Copying for private or commercial purposes, in any form and by any means, is not permitted without the prior written consent of Volkswagen AG. Volkswagen AG does not guarantee or accept any liability with respect to the correctness of information in this document. Copyright by Volkswagen AG.
satelettronica

00 - Technical data

1 - Technical data

1.1 - Technical data

1.2 - Engine number

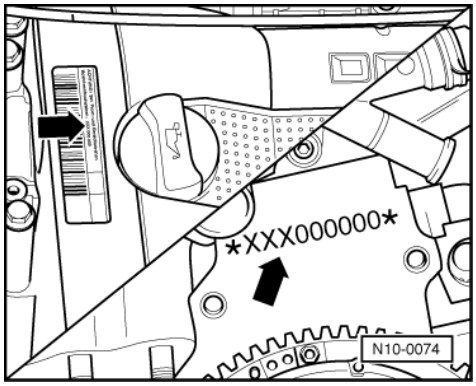

-> The engine number ("Code letters" and "Serial number") can be found on the front of the cylinder block at the gearbox end below the thermostat housing.

Additionally there is a sticker on the toothed belt guard with "Engine code" and "Serial number".

The engine code is also included on the vehicle data plate.

1.3 - Engine data

Engine code		AJV
Manufactured		06.98 ▸
Capacity	cm3	1598
Output	kW at rpm	88/6200
Torque	Nm at rpm	148/3400
Bore	mm ø	76.5
Stroke	mm	86.9
Compression ratio		10.6
RON	min.	98 unleaded1)
Injection, ignition		4AV
Knock control		x
Self diagnosis		x
Lambda control		x
Catalyst		x
Charging		-

Protected by copyright. Copying for private or commercial purposes, in part or in whole, is not permitted unless authorised by Volkswagen AG. Volkswagen AG does not guarantee or accept any liability with respect to the correctness of information in this document. Copyright by Volkswagen AG.
satelettronica

Emissions fulfil	D3 standard

1) In exceptional circumstances min. 95 RON, however with reduced performance

satelettronica

Protected by copyright. Copying for private or commercial purposes, in part or in whole, is not permitted unless authorised by Volkswagen AG. Volkswagen AG does not guarantee or accept any liability with respect to the correctness of information in this document. Copyright by Volkswagen AG.

10 - Removing and installing engine

1 - Removing and installing engine

1.1 - Removing and installing engine

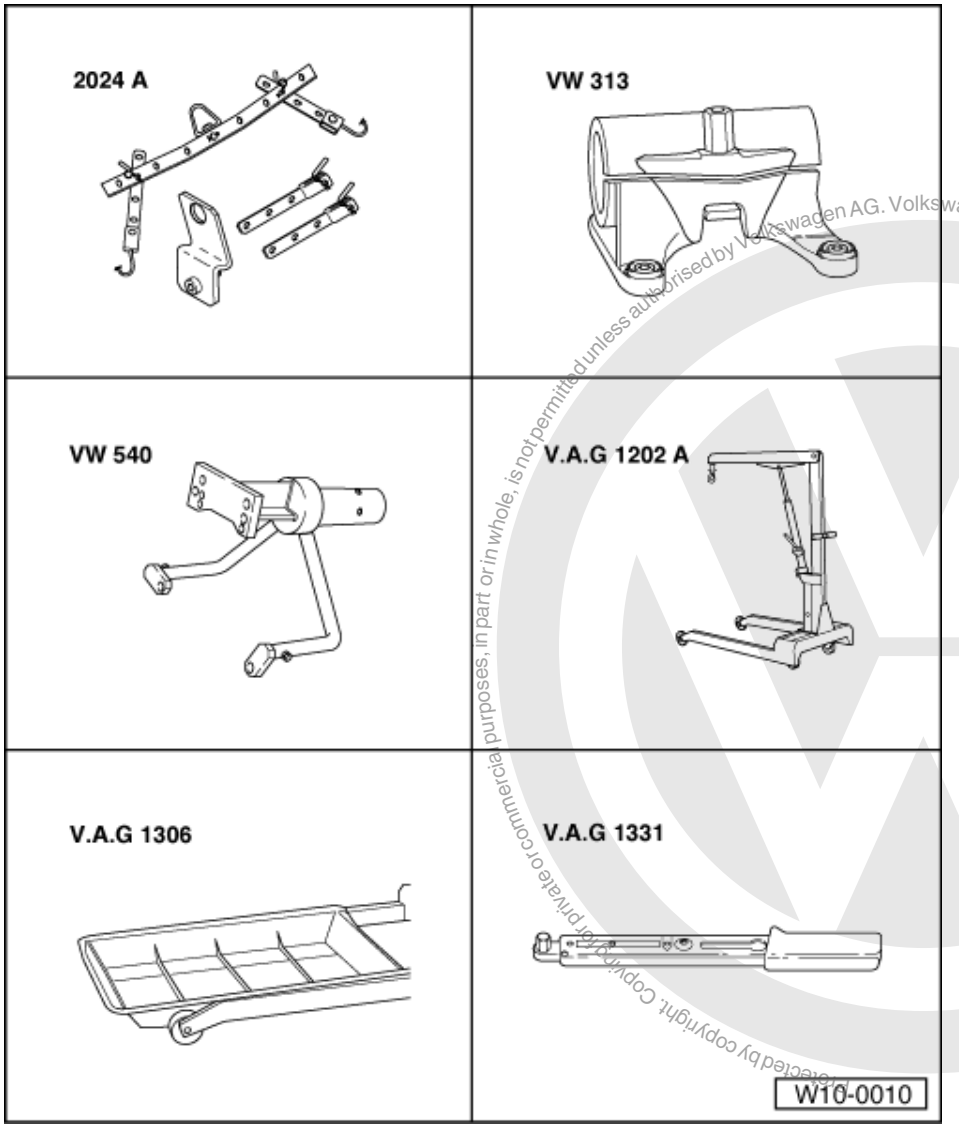

satelettronica
Protected by copyright. Copying for private or commercial purposes, in part or in whole, is not permitted unless authorised by Volkswagen AG. Volkswagen AG does not guarantee or accept any liability with respect to the correctness of information in this document. Copyright by Volkswagen AG.

Special tools, workshop equipment, test and measuring appliances and auxiliary items required

- 2024 A Lifting tackle
- VW 313 Support clamp
- VW 540 Engine and gearbox support
- V.A.G 1202 A Workshop crane
- V.A.G 1306 Drip tray
- V.A.G 1331 Torque wrench (5...50 Nm)

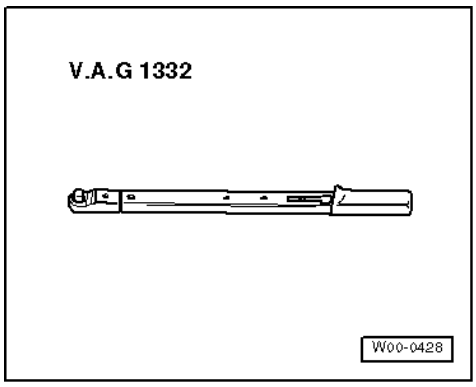

- V.A.G 1332 Torque wrench (40...200 Nm)

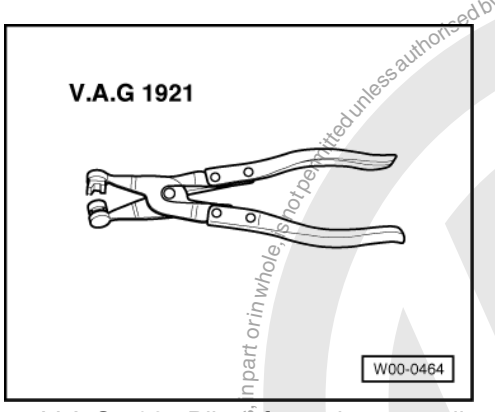

- V.A.G 1921 Pliers for spring-type clips
- G 000 100 grease (vehicles with manual gearbox)
- Cable tie

1.2 - Notes on removing

- First check whether a coded radio is fitted. If this is the case obtain the anti-theft coding.
- The engine is removed forwards together with the gearbox.
- With ignition switched off disconnect battery earth strap.
- Removing front bumper:

=> General body repairs, Repair group 63; Front bumper, removing and installing front bumper

- Bring lock carrier into service position:

=> General body repairs; Repair group 50; Body front; lock carrier service position Body front lock carrier service position

- All cable ties which are opened or cut open when removing engine, must be replaced in the same position when installing engine.
- Open and close the expansion tank sealing cap to release pressure in cooling system.

Protected by copyright. Copyright by Volkswagen AG.
Copyright by Volkswagen AG. Volkswagen AG does not guarantee or accept any liability with respect to the correctness of information in this document.
Copyright by Volkswagen AG. Not permitted unless authorised by Volkswagen AG. Volkswagen AG does not guarantee or accept any liability with respect to the correctness of information in this document.
Copyright by Volkswagen AG. Not permitted for commercial purposes, in part or in whole, unless authorised by Volkswagen AG.
satelettronica

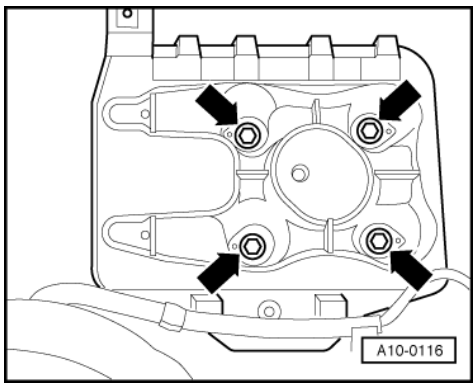

- -> Remove battery and battery retainer.
- Unclip cable guide -from battery to bulkhead-.
- Release plus wire from battery to starter motor (is removed together with assembly).
- Unclip accelerator cable from air cleaner upper part.
- Detach the accelerator cable from the support bracket and the throttle valve control part (do not remove locating clip).
- Remove air cleaner:

=> Repair group 24; Servicing injection; Dismantling and assembling air cleaner Servicing injection Dismantling and assembling air cleaner

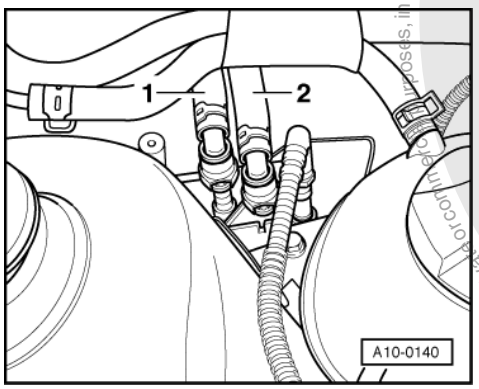

- -> Now separate fuel supply as well as fuel return pipes -item 1 and 2- (press release button).

Warning!
Fuel supply lines are under pressure! Before removing from hose connection wrap a cloth around the connection. Then release pressure by carefully pulling hose off connection.

- Loosen or separate the following components:
  - The hose from intake manifold to activated charcoal filter system
  - The vacuum hose from inlet manifold to brake servo
  - The connector from engine speed sender below oil dipstick tube bracket, and pull connector out from retainer
  - The connector from ignition transformer, from Hall sender and throttle valve control part
  - The connector from coolant temperature sender, oil pressure switch and exhaust gas recirculation valve
  - Injector connectors

Vehicles with manual gearbox

- Disconnect selector mechanism from gearbox.

=> 5-Speed manual gearbox 02K; Repair group 34; Servicing selector mechanism Servicing selector mechanism

Vehicles with automatic gearbox

- Remove selector lever cable from gearbox:

Protected by copyright. Copying for private or commercial purposes, in part or in whole, is not permitted unless authorised by Volkswagen AG. Volkswagen AG does not guarantee or accept any liability with respect to the correctness of information in this document. Copyright by Volkswagen AG.
satelettronica

=> Automatic gearbox 01M; Repair group 37; Servicing shift mechanism; Dismantling and assembling shift mechanism Servicing shift mechanism Dismantling and assembling shift mechanism

Continuation for all vehicles

- Remove noise insulation tray:

=> General body repairs; Repair group 50; Front body; Removing insulation tray Front body Removing insulation tray

- Loosen or separate the following components:
  - Lambda probe connector
  - The 2 pin connector from knock sensor (rear of cylinder block) and the 4 pin connector from intake manifold pressure sender front right below intake manifold
- Drain coolant => Page 115 .
- Loosen hose clips and pull coolant hoses off coolant thermostat housing.
- Loosen belt pulley securing bolts from power steering vane pump.
- Remove ribbed belt => Page 22 .
- Unbolt power steering vane pump and secure to sub-frame with wire; hoses remain connected.

=> Running gear; Repair group 48; Assembly overview: vane pump, reservoir, hydraulic lines; Removing and installing power steering vane pump. Assembly overview: vane pump, reservoir, hydraulic lines Removing and installing power steering vane pump.

Vehicles with air conditioner

- Removing air conditioner compressor:
- Observe additional information and removal instructions =>Page10-15

Vehicles with manual gearbox

- Remove hydraulic clutch slave cylinder:

=> 5-Speed manual gearbox 02K; Repair group 30; Servicing clutch control Servicing clutch control

Note:

Clutch pedal must not be depressed.

Continuation for all vehicles

- Pull radiator coolant hoses off engine using hose clip pliers V.A.G 1921.

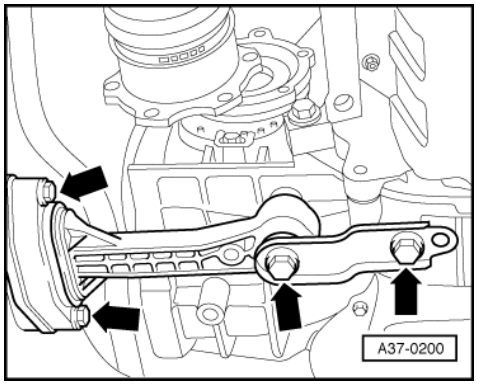

- -> Disconnect pendulum support -arrows-.
- Pull vacuum and breather hoses off engine.
- Disconnect all electric wires from gearbox, alternator and starter and move clear.
- Separate front exhaust pipe from exhaust manifold => Page 143 , exhaust manifold, front exhaust pipe and catalyst with attachments.
- Remove securing clamps for power steering pressure pipe.
- Pull off/disconnect all other electrical connections as necessary from engine and lay to one side.

Copyright by Volkswagen AG. Volkswagen AG does not guarantee or accept any liability with respect to the correctness of information in this document. Copyright by Volkswagen AG. Protected by copyright. Copying for private or commercial purposes, in part or in whole, is not permitted unless authorised by Volkswagen AG.
satelettronica

- Remove left and right-hand drive shaft on gearbox and tie up:

=> Running gear; Repair group 40; Removing and installing drive shaft Removing and installing drive shaft

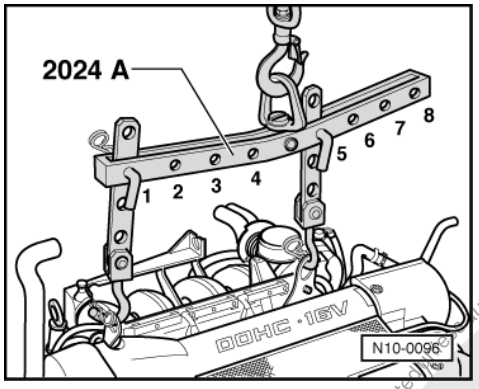

- -> Attach lifting tackle 2024 A as follows and lift slightly with workshop crane:

  Pulley end:
  3rd hole in hook at position 1

  Flywheel end:
  3rd hole in hook at position 5

Warning! The hooks and locating pins must be secured with locking pins.

Notes:

- The positions marked 1...4 on the bar must be towards the pulley end.
- The holes in the hook rails are counted up from the hook.

- Remove coolant system expansion reservoir and lay to one side.
- Remove power steering reservoir and tie up.

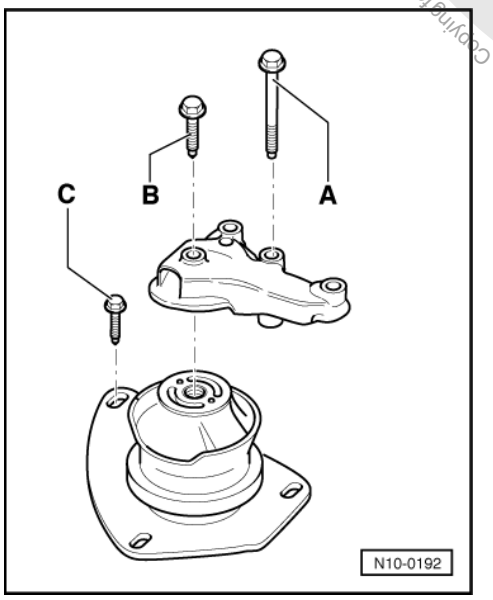

- Remove activated charcoal filter.
- -> Remove engine mounting. To do this unscrew bolts -A, B and C-.

Protected by copyright. Copying for private or commercial purposes, in part or in whole, is not permitted unless authorised by Volkswagen AG. Volkswagen AG does not guarantee or accept any liability with respect to the correctness of information in this document. Copyright by Volkswagen AG.
satelettronica

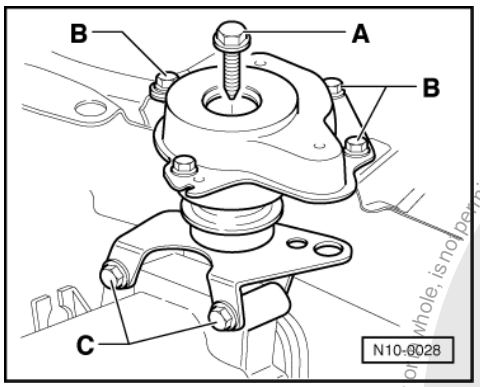

- -> Remove gearbox mounting. To do this unscrew bolts -A, B and C-.

Turn assembly slightly to left (engine forwards, gearbox rearwards) and lift engine carefully out forwards.

Note:

When the assembly is lifted off, it must be carefully guided to prevent damage to the bodywork.

1.3 - Securing engine to assembly stand

When working on the engine, it should be secured to the assembly stand support clamp VW 313 using the engine and gearbox box support VW 540.

Work sequence

- Remove gearbox.
- Remove pressure plate.
- Remove flywheel.
- Remove intermediate plate.

Vehicles with automatic gearbox

- Secure torque converter against "falling out" after separating engine from gearbox.

Continuation for all vehicles

- Secure engine to support clamp VW 313 using engine and gearbox support VW 540.

1.4 - Notes on installing

Installation is carried out in the reverse sequence, when doing this note the following:

- Check clutch release bearing for wear, renew if necessary.

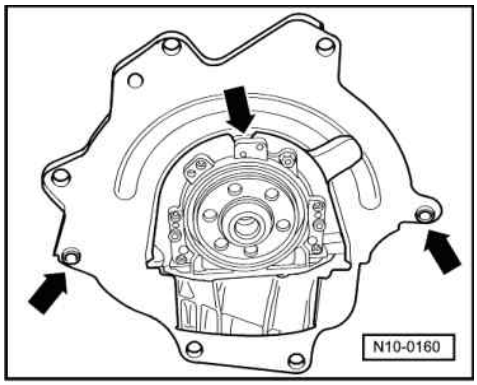

Protected by copyright. Copying for private or commercial purposes, in part or in whole, is not permitted unless authorised by Volkswagen AG. Volkswagen AG does not guarantee or accept any liability with respect to the correctness of information in this document. Copyright by Volkswagen AG.
satelettronica

- Lightly grease clutch release bearing, release bearing guide sleeve and splines on input shaft with G 000 100.
- Check whether the dowel sleeves for centralising engine/gearbox are in the cylinder block, install if necessary.
- -> Fit intermediate plate onto sealing flange and slide onto dowel sleeves -arrows-.
- When swinging the assembly in, ensure that clearance exists between the drive shafts.

Vehicles with manual gearbox

- Check centring of clutch drive plate, if necessary.
- Check clutch release bearing for wear, renew if necessary.
- Lightly grease clutch release bearing, release bearing guide sleeve and splines on input shaft with G 000 100.
- Install hydraulic clutch slave cylinder:

=> 5-Speed manual gearbox 02K; Repair group 30; Servicing clutch control Servicing clutch control

- Install gear selector mechanism:

=> 5-Speed manual gearbox 02K; Repair group 34; Servicing selector mechanism Servicing selector mechanism

Vehicles with automatic gearbox

- Only use nuts approved in parts programme to secure torque converter to drive plate.
- Install selector cable on gearbox, adjust if necessary:

=> Automatic gearbox 01M; Repair group 37; Servicing shift mechanism; Dismantling and assembling shift mechanism Servicing shift mechanism Dismantling and assembling shift mechanism

Continuation for all vehicles

- Align engine mountings stress-free by rocking, if necessary loosen engine mountings to body.
- Install drive shafts:

=> Running gear; Repair group 40; Removing and installing drive shafts Removing and installing drive shafts

- Install front exhaust pipe => Page 143 , exhaust manifold, front exhaust pipe with catalyst and attachments.
- Installing P.A.S. vane pump:

=> Running gear; Repair group 48; Assembly overview: vane pump, reservoir, hydraulic pipes Assembly overview: vane pump, reservoir, hydraulic pipes

- Install air conditioner compressor.
- Electrical connections and routing:

=> Electrical system; Repair group 97

- Install ribbed belt => Page 22 .
- Adjust throttle cable => Page 138
- Install centre, left and right insulation trays:

=> General body repairs exterior; Repair group 50; Body front; Assembly overview Body front Assembly overview

- Filling with coolant => Page 115
- Install air cleaner:

=> Repair group 24; Servicing injection system; Dismantling and assembling air cleaner. Servicing injection system Dismantling and assembling air cleaner.

- Match engine electronics control unit to throttle valve control part:

Protected by copyright. Copyright by Volkswagen AG.
Copyright by Volkswagen AG. Volkswagen AG does not guarantee or accept any liability with respect to the correctness of information in this document.
Copyright by Volkswagen AG. Volkswagen AG does not guarantee or accept any liability with respect to the correctness of information in this document.
Protected by copyright. Copyright by Volkswagen AG.
satelettronica

=> Repair group 24; Engine control unit; Matching engine control unit to throttle valve control part Engine control unit Matching engine control unit to throttle valve control part

1.5 - Tightening torques

Bolted connection		Tightening torque
Engine to gearbox	M10	45 Nm
	M12	80 Nm
Starter to gearbox		20 Nm
Drive shafts to flanged shafts		45 Nm
Flywheel shield plate		10 Nm
Selector mech. mount on gearbox		25 Nm
Selector mech. support on engine and sub-frame		20 Nm
Selector finger on selector rods		25 Nm
Exhaust pipe to manifold		40 Nm

1.6 - Assembly mountings

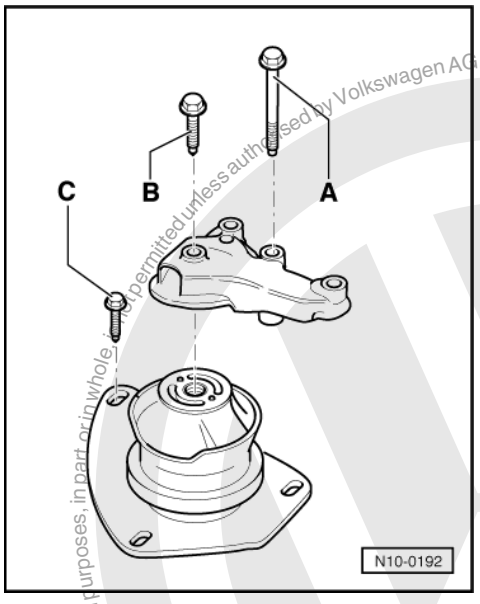

Tightening torques

Note:

The bolts must not be used again.

-> Engine mounting

A = 40 Nm + 1/4 turn (90°) further
B = 50 Nm
C = 20 Nm + 1/8 turn (45°) further

Protected by copyright. Copying for private or commercial purposes, in part or in whole, is not permitted unless authorised by Volkswagen AG. Volkswagen AG does not guarantee or accept any liability with respect to the correctness of information in this document. Copyright by Volkswagen AG.
satelettronica

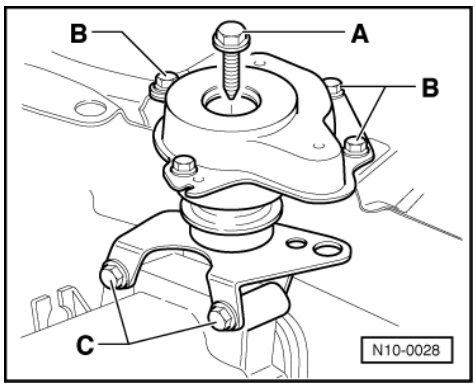

-> Gearbox mounting

A = 60 Nm + 1/4 turn (90°) further
B = 20 Nm + 1/8 turn (45°) further
C = 50 Nm

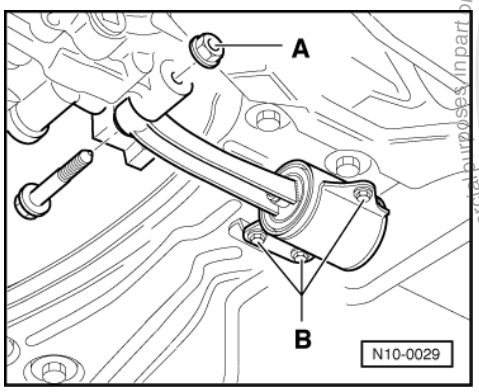

-> Pendulum support

A = 50 Nm (tighten on nut)
B = 35 Nm

1.7 - Additional information and removal instructions for vehicles with air conditioner

Warning!
The air conditioning system refrigerant circuit must not be opened.

Note:

To prevent damage to condenser and also to the refrigerant lines/hoses, ensure that the pipes and hoses are not stretched, kinked or bent.

To facilitate removing and installing the engine without opening the refrigerant circuit:

- Unbolt air conditioner fluid reservoir and allow to hang free.
- Unbolt retaining clamp(s) for refrigerant lines.
- Remove ribbed belt => Page 22 .
- Removing lock carrier with attachments:

Protected by copyright. Copying for private or commercial purposes, in part or in whole, is not permitted unless authorised by Volkswagen AG. Volkswagen AG does not guarantee or accept any liability with respect to the correctness of information in this document. Copyright by Volkswagen AG.
satelettronica

=> General body repairs; Repair group 50; Body, front; Removing and installing lock carrier with attachments.
Body, front Removing and installing lock carrier with attachments.

- Removing air conditioner compressor:

=> Heating, air conditioner system; Repair group 87

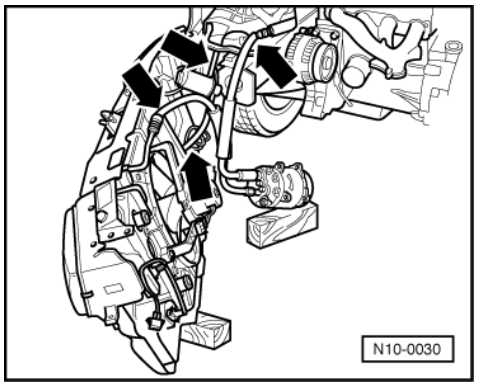

- -> Remove air conditioner compressor and lay to one side with lock carrier so that the refrigerant hoses - arrows- are not stressed.

Protected by copyright. Copying for private or commercial purposes, in part or in whole, is not permitted unless authorised by Volkswagen AG. Volkswagen AG does not guarantee or accept any liability with respect to the correctness of information in this document. Copyright by Volkswagen AG.
satelettronica

13 - Crankshaft group

1 - Dismantling and assembling engine

1.1 - Dismantling and assembling engine

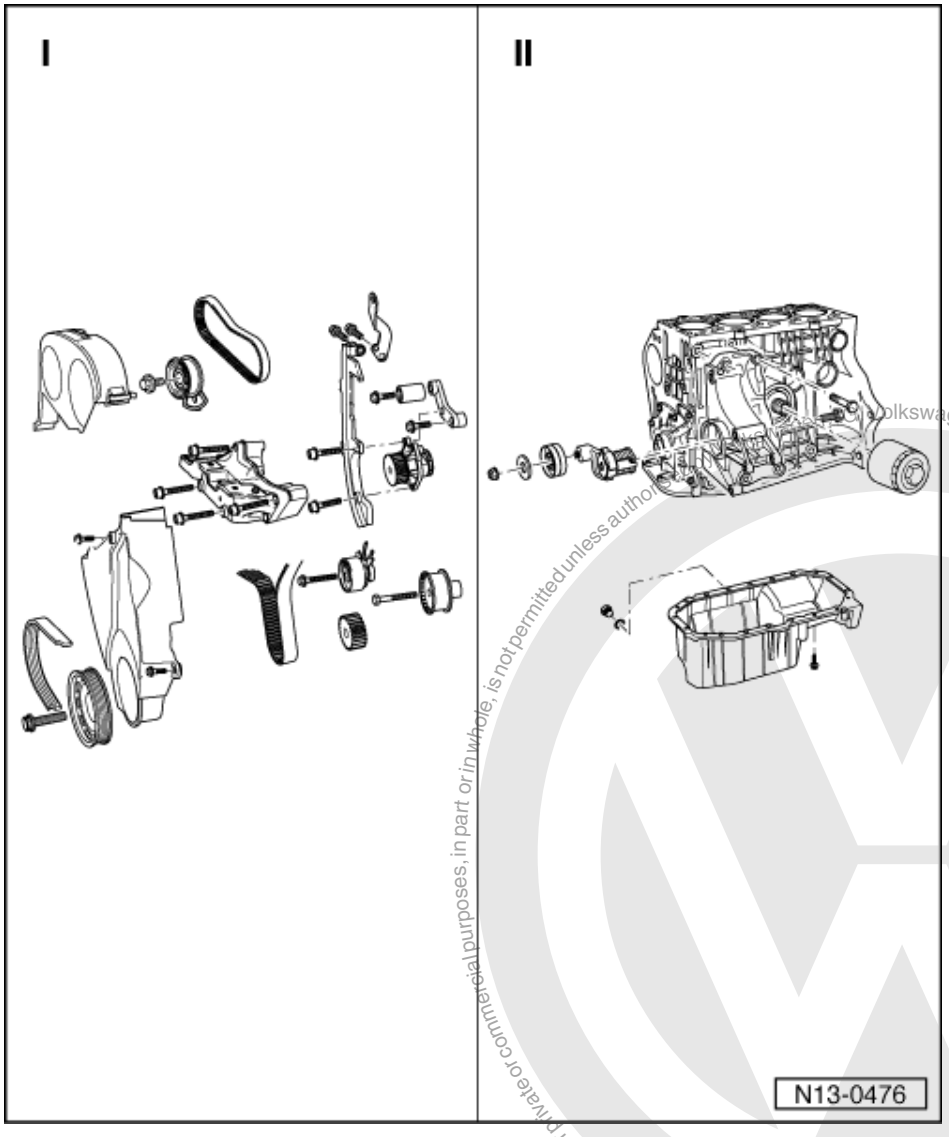

I =>Page 14

II =>Page 19

Protected by copyright. Copying for private or commercial purposes, in part or in whole, is not permitted unless author
Volkswagen AG does not guarantee or accept any liability with respect to the correctness of information in this document. Copyright by Volkswagen AG.
satelettronica

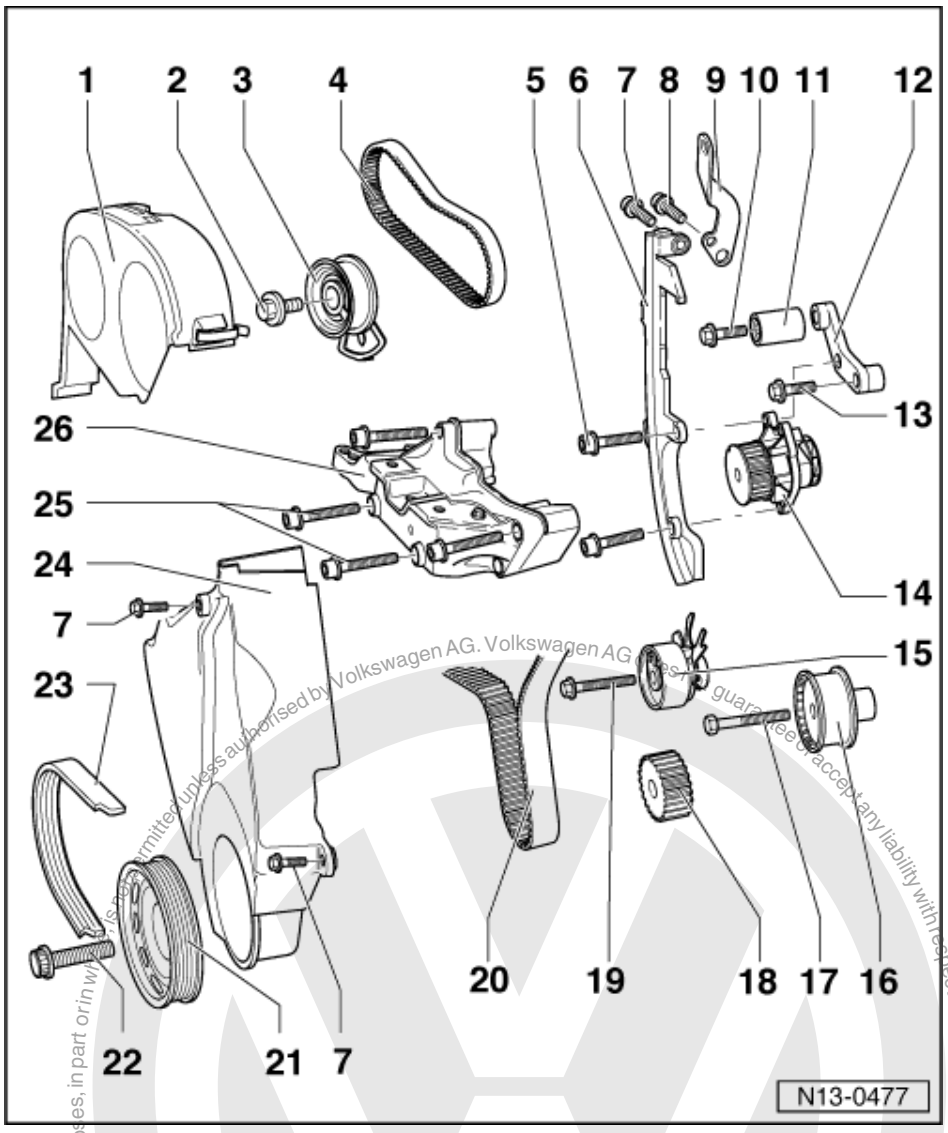

Part I

1 Toothed belt guard - upper part
2 20 Nm
3 Coupling drive tensioning roller
- Checking => Page 32
- Tensioning toothed belts => Page 25

4 Coupling drive toothed belt
- Mark D.O.R. before removing
- Check for wear
- Do not kink
- Toothed belt routing => Fig. 1
- Removing, installing and tensioning => Page 25

5 20 Nm
6 Rear toothed belt guard
7 12 Nm

Protected by copyright. Copyright by Volkswagen AG.
Copyright by Volkswagen AG. Volkswagen AG does not guarantee or accept any liability with respect to the correctness of information in this document. Copying for private or commercial purposes, in part or in whole, is not permitted unless authorised by Volkswagen AG.
satelettronica

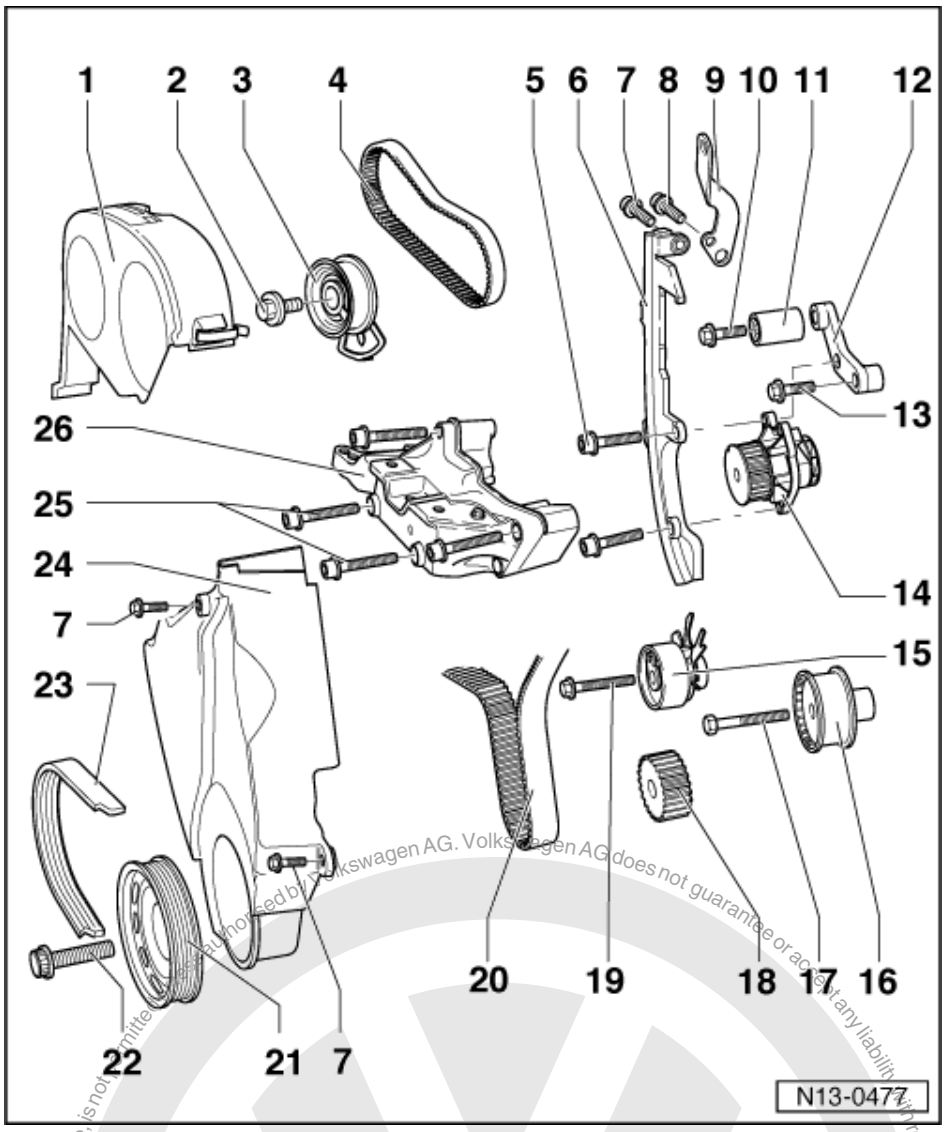

8 20 Nm
9 Lifting eye
10 25 Nm
11 Idler roller
12 Bracket
13 50 Nm
14 Coolant pump
- Removing and installing => Page 119

15 Main drive tensioning roller
- Checking => Page 32
- Tensioning toothed belts => Page 25

Protected by copyright. Copyright by Volkswagen AG.
Copyright by Volkswagen AG. Volkswagen AG does not guarantee or accept any liability with respect to the correctness of information in this document.
satelettronica

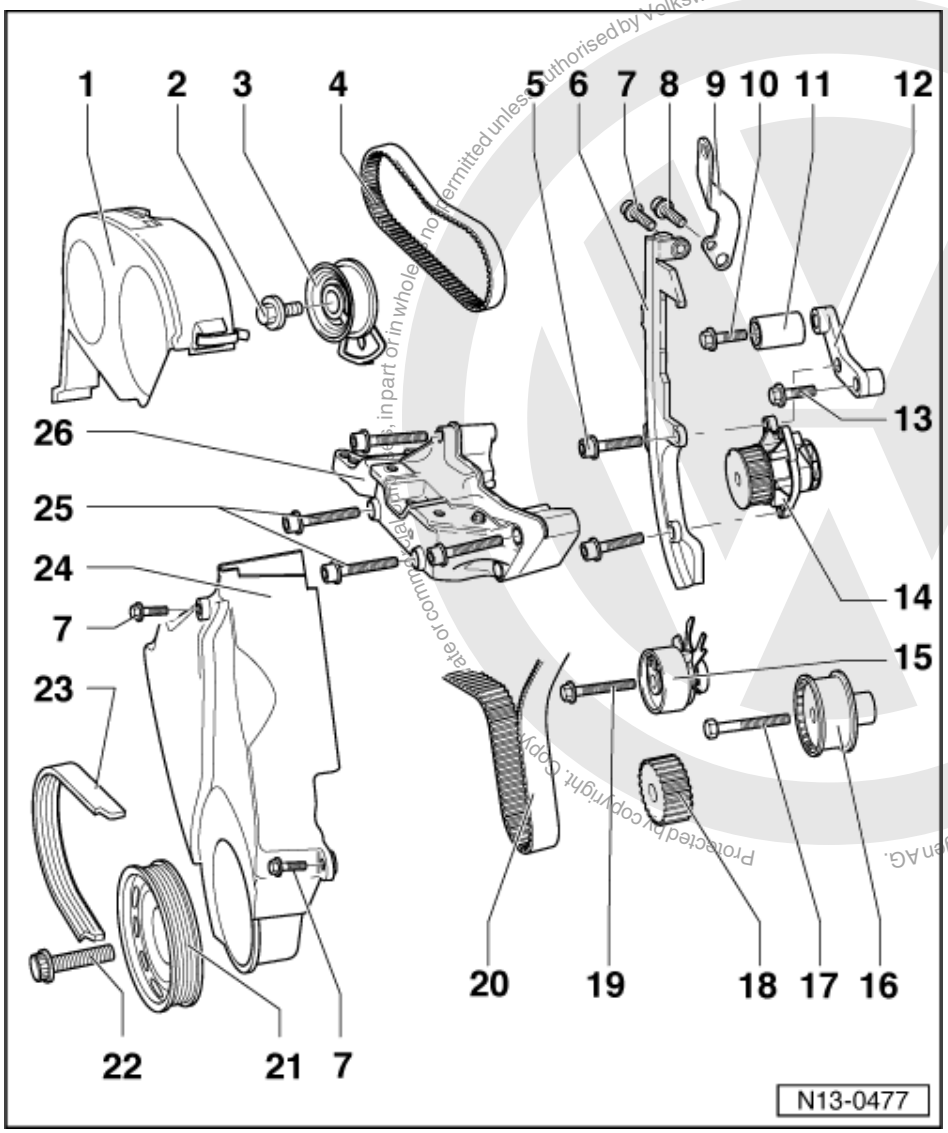

16 Main drive toothed belt idler roller

17 50 Nm

18 Crankshaft toothed belt sprocket

- Note position when installing toothed belt
  => Page 25

19 20 Nm

20 Main drive toothed belt

- Mark D.O.R. before removing
- Check for wear
- Do not kink
- Toothed belt routing => Fig. 1
- Removing, installing and tensioning
  => Page 25

satelettronica

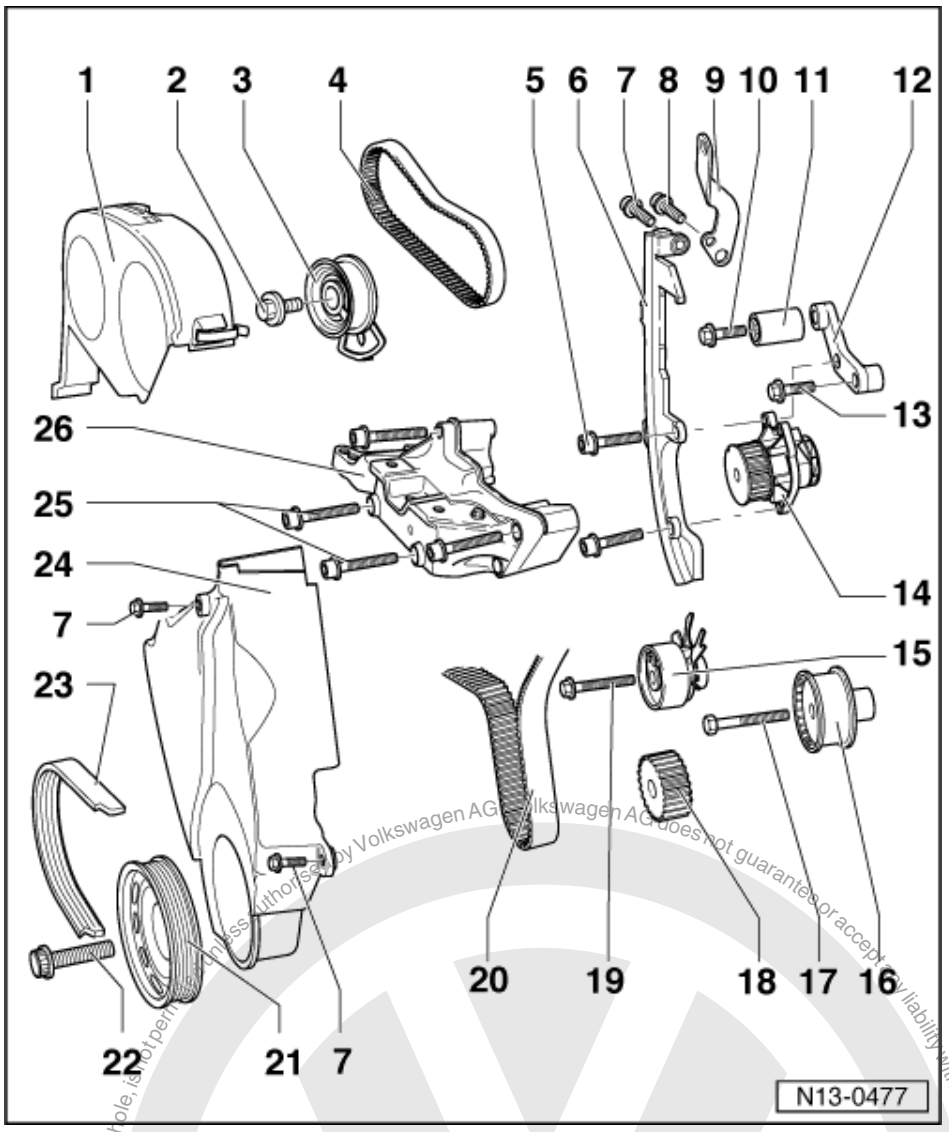

21 Belt pulley

- When installing note fixing arrangement
- Removing and installing
  => Page 25 ; Removing, installing and tensioning toothed belt
- Removing and installing ribbed belt => Page 22

22 90 Nm + 1/4 turn (90 °) further

- Renew
- Oil threads
- The turning further can be done in several stages
- The turning further angle can be checked with a commercial protractor e.g. Hazet 6690

satelettronica

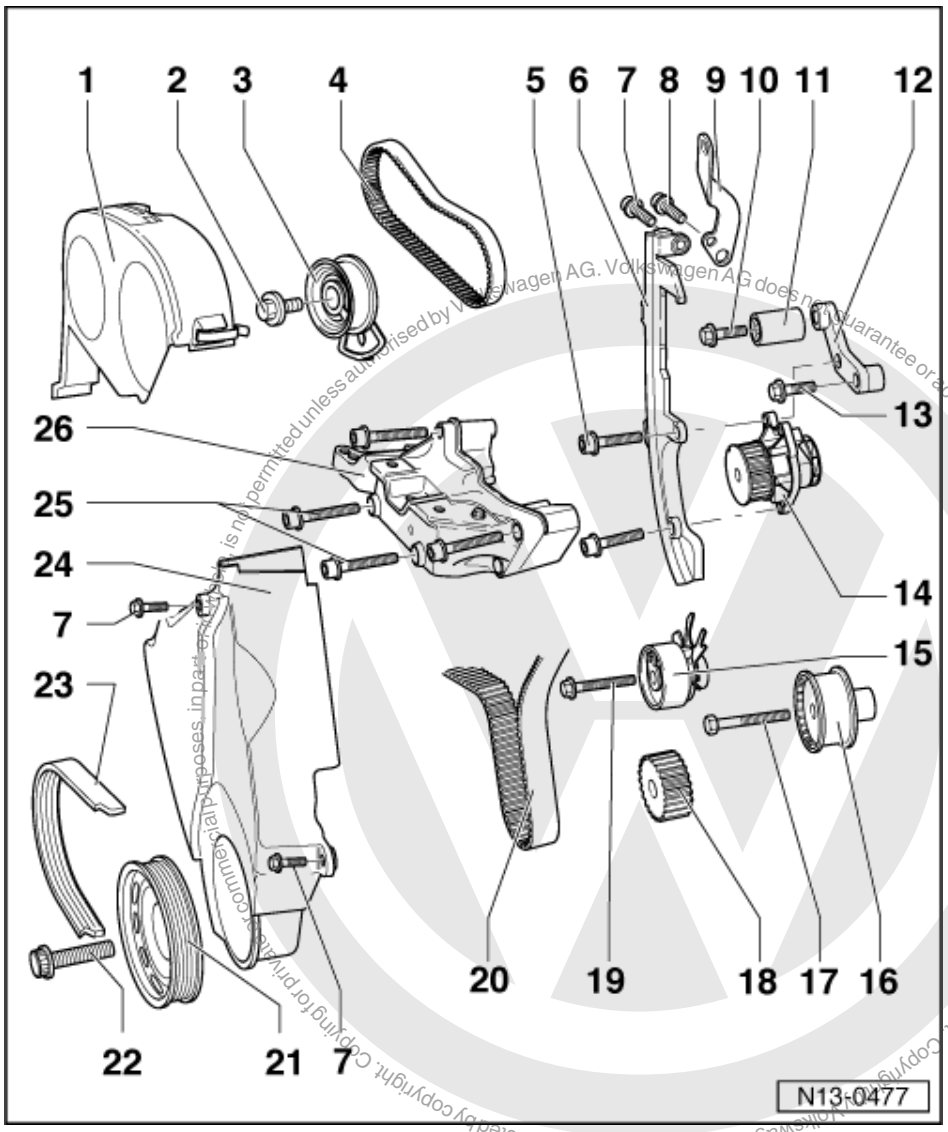

23 Ribbed belt

- Mark direction of rotation before removing
- Removing and installing
  => Page 22
- Ribbed belt routing
  => Page 23
- Vehicles with air conditioning system have an additional idler roller

24 Toothed belt guard - lower part

25 50 Nm

26 Console

Protected by copyright. Copying for private or commercial purposes, in part or entirely, is not permitted unless authorised by Volkswagen AG. Volkswagen AG does not guarantee or accept any liability with respect to the correctness of information in this document. Copyright by Volkswagen AG.
satelettronica

Protected by copyright. Copying for private or commercial purposes, in part or in whole, is not permitted unless authorised by Volkswagen AG. Volkswagen AG does not guarantee or accept any liability with respect to the correctness of information in this document. Copyright by Volkswagen AG.

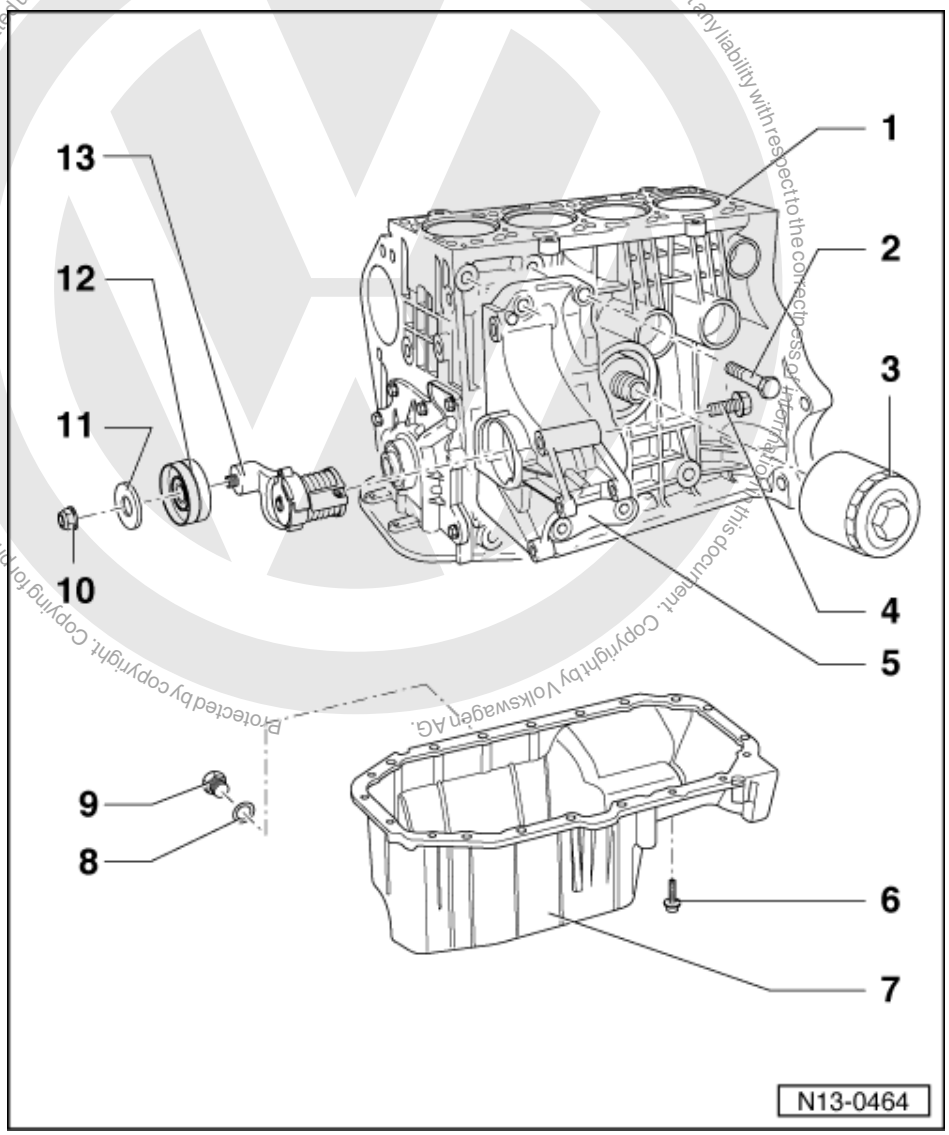

Part II

Note:

Servicing the clutch:

=> 5-Speed manual gearbox 02K; Repair group 30; Servicing clutch; Removing and installing clutch Servicing clutch Removing and installing clutch

1 Cylinder block
- Dismantling and assembling pistons and conrods
  => Page 51

2 50 Nm
- Tightening sequence:
  Upper right bolt first, then lower right bolt, and bolts on left last (as seen from direction of travel)

satelettronica

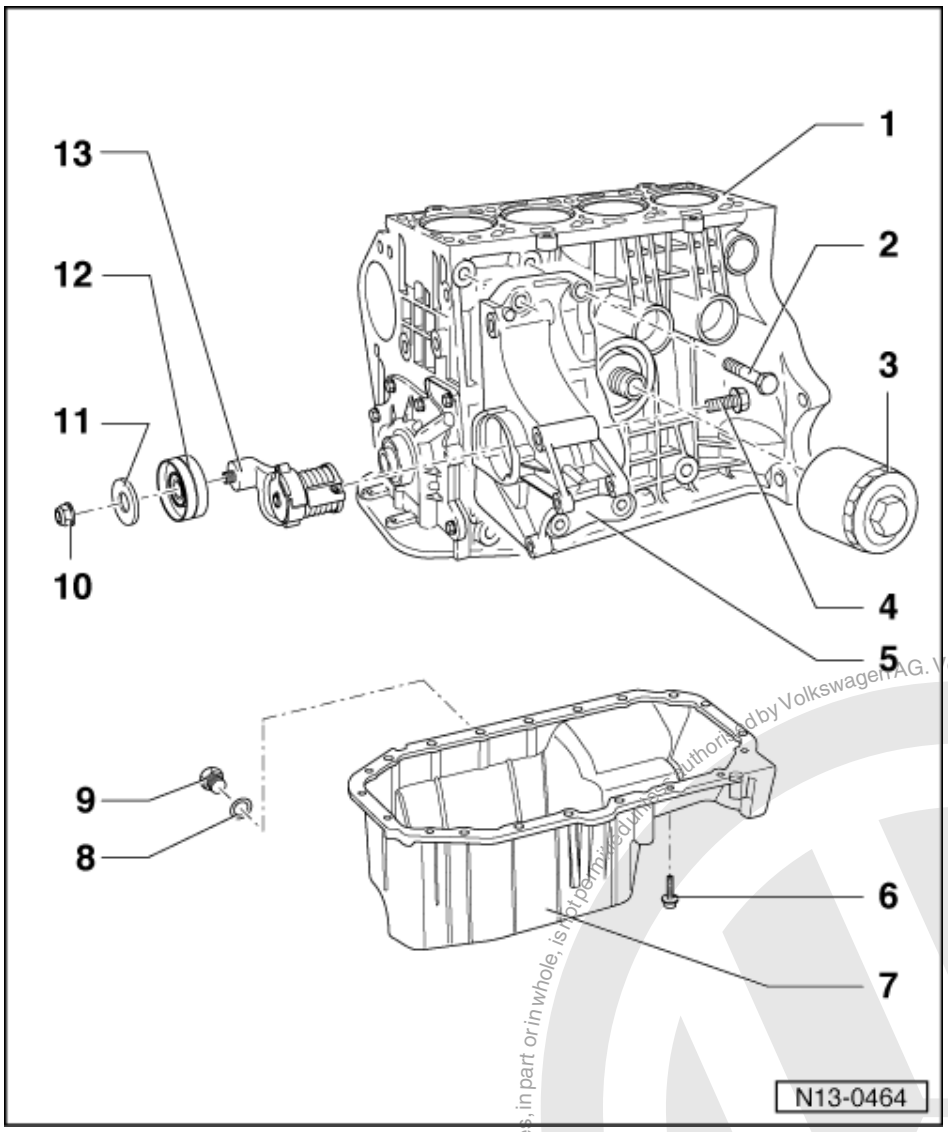

3 Oil filter
- Loosen at hexagon bolt head
- Tighten by hand
- Note instructions on filter when installing

4 M8: 20 Nm + 1/4 turn (90 °) further,
M10: 45 Nm

5 Compact bracket
- For vane pump and alternator
- For vehicles without air conditioning system
- Removing and installing compact bracket on vehicles with air conditioning system:

=> Heating, air conditioning; Repair group 87; Air conditioner with manual control; Removing and installing air conditioner compressor bracket Air conditioner with manual control Removing and installing air conditioner compressor bracket

satelettronica
Protected by copyright. Copyright by Volkswagen AG.
Copyright by Volkswagen AG. Volkswagen AG does not guarantee or accept any liability with respect to the correctness of information in this document. Copying for private or commercial purposes, in part or in whole, is not permitted unless authorised by Volkswagen AG.

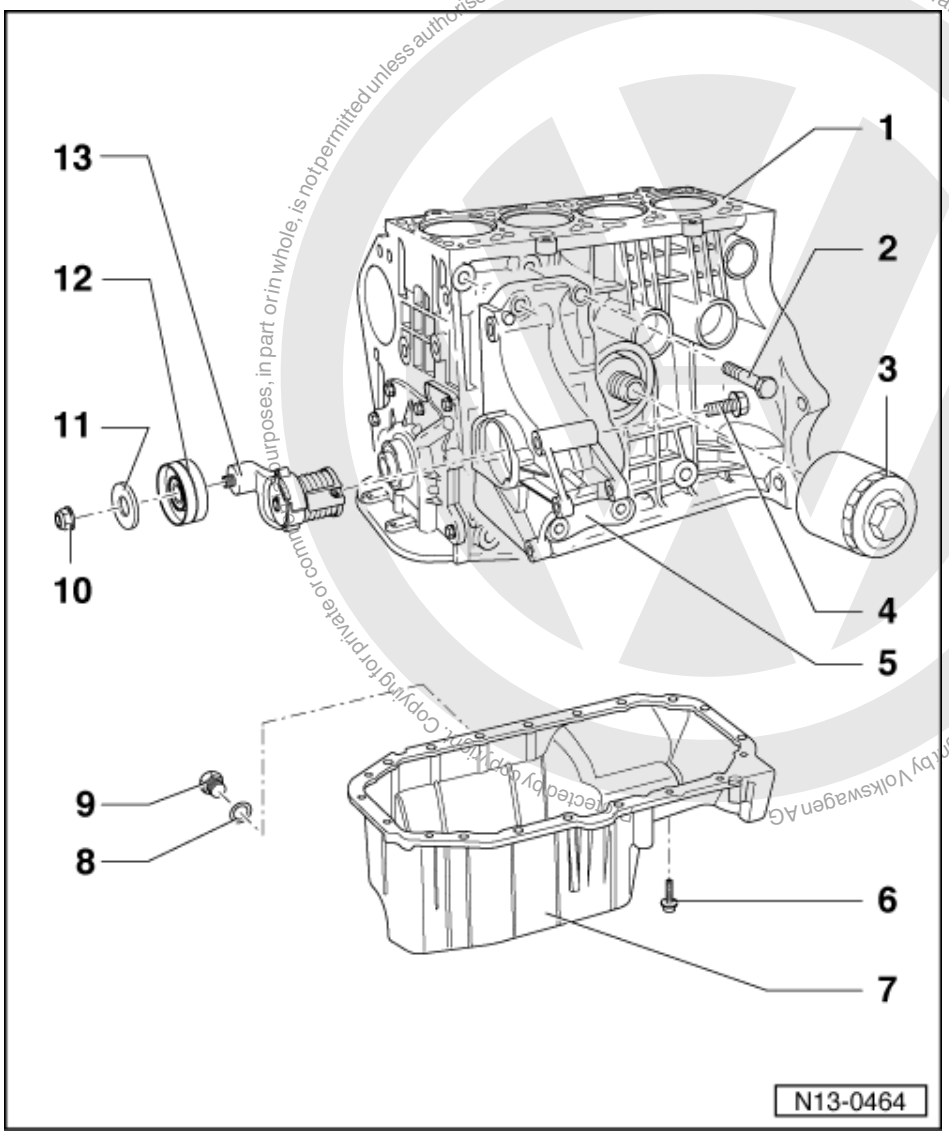

6 13 Nm
- Loosen and tighten only bolts on flywheel end with socket insert T10058

7 Sump
- Removing and installing
  => Page 97

8 Sealing ring
- Renew

9 Oil drain plug, 30 Nm

10 45 Nm

11 Washer

12 Tensioning roller

13 Tensioning element

Volkswagen AG. Volkswagen AG does not guarantee or accept any liability with respect to the correctness of information in this document. Copyright by Volkswagen AG. Copying for private or commercial purposes, in part or in whole, is not permitted unless authorised by Volkswagen AG. Copying for private or commercial purposes, in part or in whole, is not permitted unless authorised by Volkswagen AG.
satelettronica

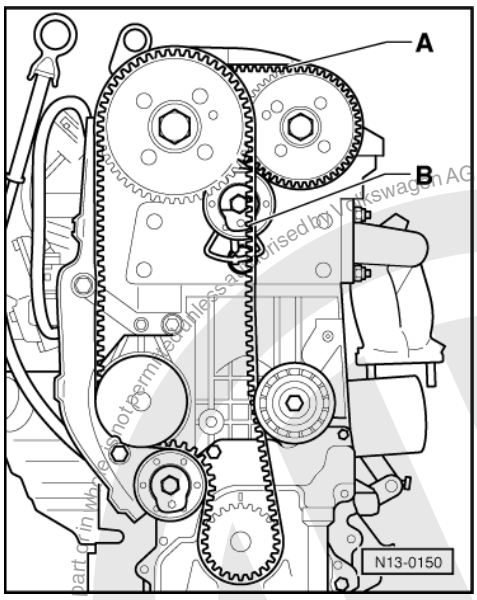

-> Fig. 1 Toothed belt routing

A - Coupling drive toothed belt

B - Main drive toothed belt

1.2 - Removing and installing ribbed belt

Removing

- Remove engine cover first.
- Mark ribbed belt direction of rotation.

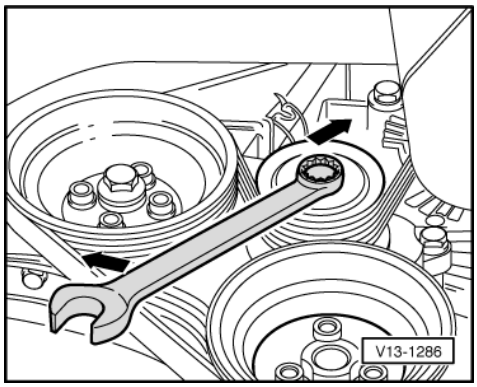

- -> Using a spanner on the securing bolt swivel tensioning roller in direction of arrow.
- Remove ribbed V-belt.

Installing

- Place ribbed V-belt onto crankshaft pulley first. Slide belt onto tensioning roller last.

Protected by copyright. Copying for private or commercial purposes, in part or in whole, is not permitted unless authorised by Volkswagen AG. Volkswagen AG does not guarantee or accept any liability with respect to the correctness of information in this document. Copyright by Volkswagen AG.
satelettronica

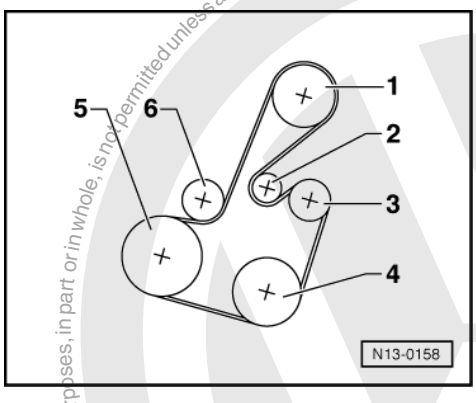

Ribbed belt routing

-> Belt drive with air conditioner compressor

1 - Pulley - P.A.S. vane pump
2 - Idler roller
3 - Pulley - Alternator
4- Air conditioner compressor
5- Crankshaft
6 - Tensioner

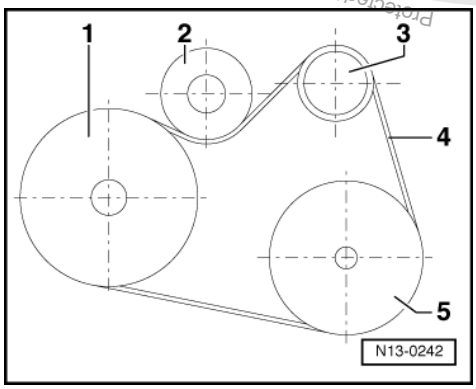

-> Belt drive without air conditioner compressor

1 - Vibration damper/belt pulley
2 - Tensioner
3 - Pulley - Alternator
4 - Ribbed belt
5 - Pulley - P.A.S. vane pump

Note:

When installing the ribbed V-belt, ensure the belt runs in the right direction and seats correctly on the belt pulleys.

The rest of the assembly is basically a reverse of the dismantling sequence.

1.3 - Checking valve timing

- Remove the toothed belt guard upper part.

Protected by copyright. Copyright by Volkswagen AG. Volkswagen AG does not guarantee or accept any liability with respect to the correctness of information in this document. Copyright by Volkswagen AG. Reproduction for commercial purposes, in part or in whole, is not permitted unless authorised by Volkswagen AG.
satelettronica

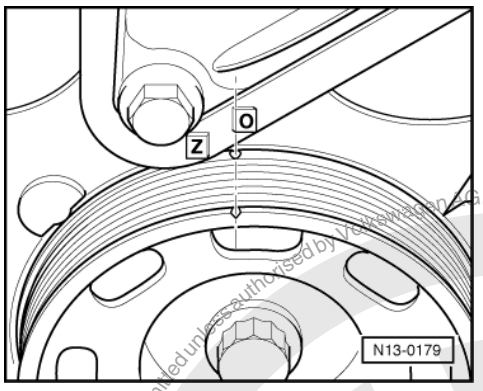

- -> Position the crankshaft to top dead centre No. 1 cylinder. The notch on the pulley must align with the edge of the -O- mark.

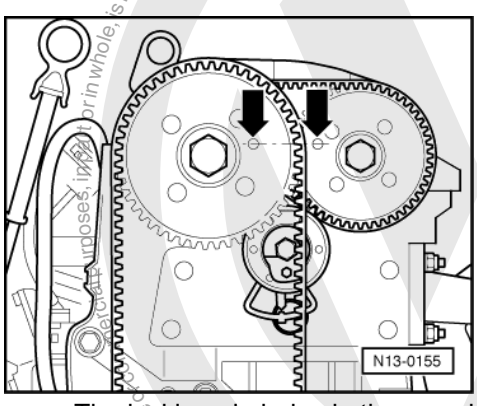

- -> The locking pin holes in the camshaft pulleys must align with the fitting holes in the camshaft housing - arrows-.

Note:

If the locking pin holes are positioned to the outside on the toothed belt pulleys, the crankshaft must be turned one revolution further.

Protected by copyright. Copying for private or commercial purposes, in part or in whole, is not permitted unless authorised by Volkswagen AG. Volkswagen AG does not guarantee or accept any liability with respect to the correctness of information in this document. Copyright by Volkswagen AG.
satelettronica

1.4 - Removing, installing and tensioning toothed belts

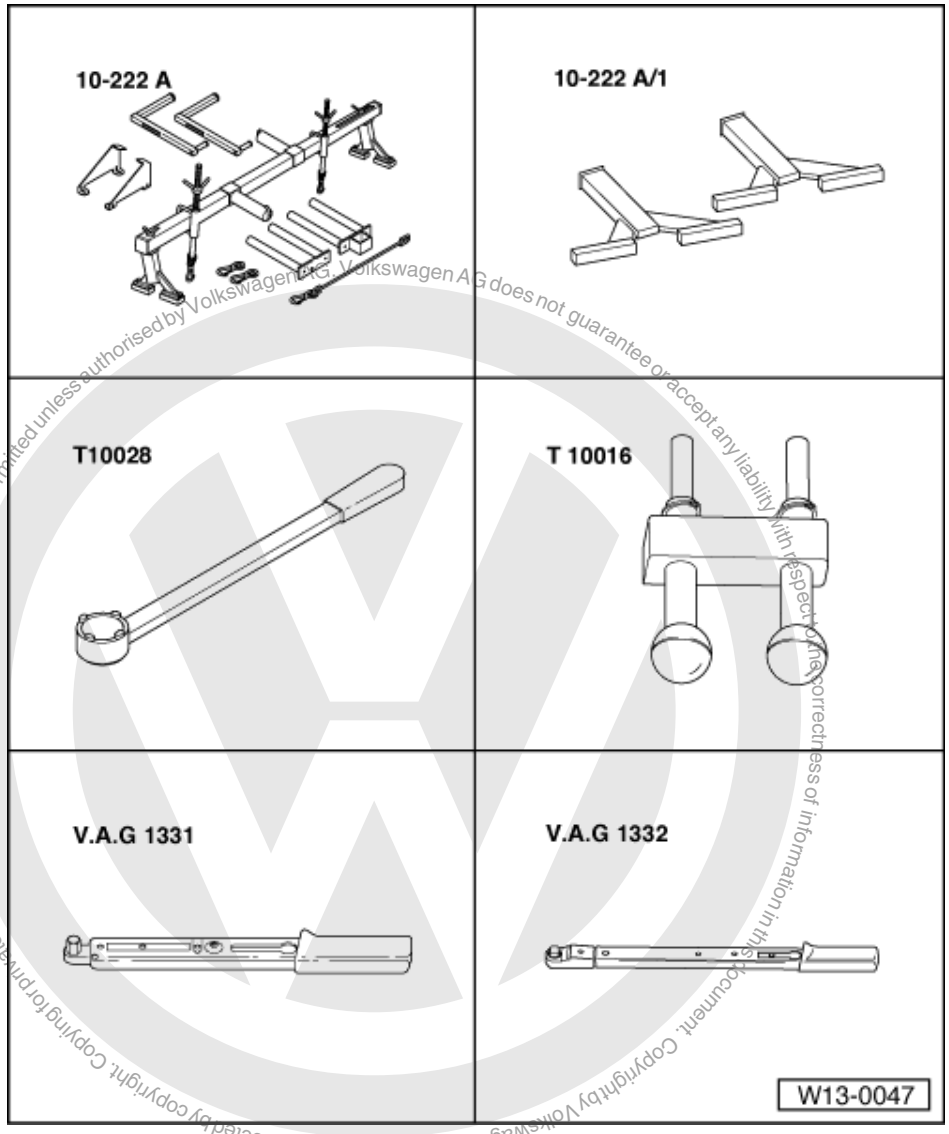

Protected by copyright. Copying for private or commercial purposes, in part or in whole, is not permitted unless authorised by Volkswagen AG. Volkswagen AG does not guarantee or accept any liability with respect to the correctness of information in this document. Copyright by Volkswagen AG.

satelettronica

Special tools, workshop equipment, test and measuring appliances and auxiliary items required

- 10-222A Support bracket
- 10-222A/1 Support for support bracket
- T 10028 Counter-hold
- T 10016 Camshaft locking device
- V.A.G 1331 Torque wrench (5...50 Nm)
- V.A.G 1332 Torque wrench (40...200 Nm)

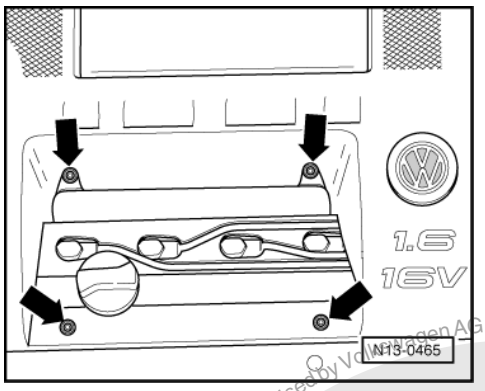

Removing

- -> Remove cover above camshaft housing -arrows-.
- Remove air cleaner:

=> Repair group 24; Servicing injection; Dismantling and assembling air cleaner Servicing injection Dismantling and assembling air cleaner

- Remove the toothed belt guard upper part.

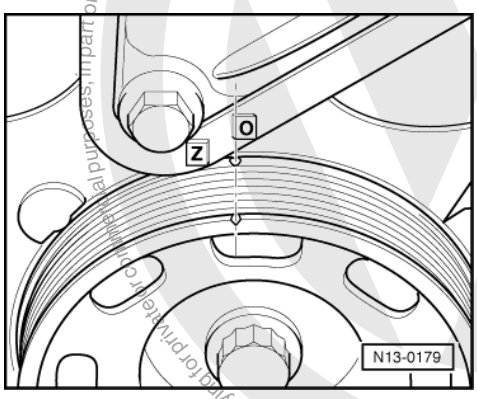

- -> Position the crankshaft to top dead centre No. 1 cylinder. The notch on the pulley must align with the edge of the -O- mark.

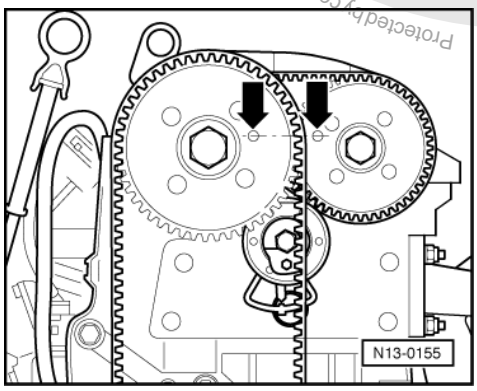

- -> The locking pin holes in the camshaft sprockets must align with the fitting holes in the camshaft housing -arrows-.

Note:

If the locking pin holes are positioned to the outside on the toothed belt sprockets, the crankshaft must be turned one revolution further.

Protected by copyright. Copying for private or commercial purposes, in part or in whole, is not permitted unless authorised by Volkswagen AG. Volkswagen AG does not guarantee or accept any liability with respect to the correctness of information in this document. Copyright by Volkswagen AG.
satelettronica

Fix both camshaft sprockets with camshaft locking device T 10016 as follows:

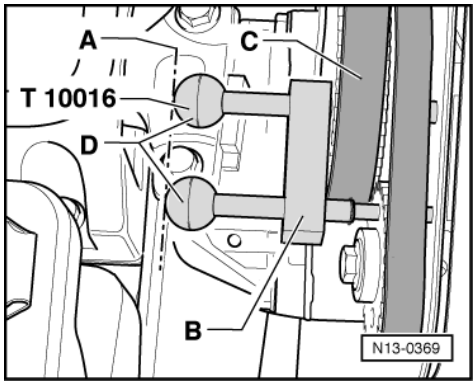

- -> Guide both locking pins through camshaft sprocket locking pin holes onto stop in camshaft housing fitting holes.

Note:

Both locking pins are inserted correctly when the ends -D- align with line -A-.

- Slide retainer -B- onto stop on inlet camshaft sprocket -C-.

The engine must be lowered slightly as follows to enable the crankshaft sprocket to be removed:

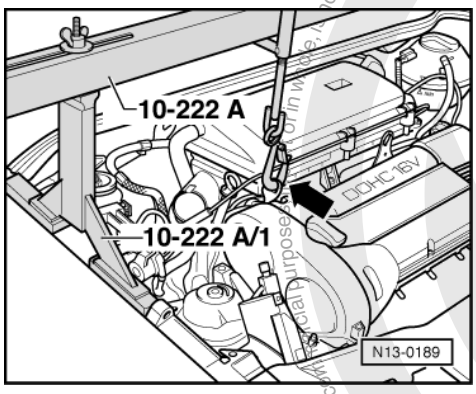

- -> Fit support 10-222A with legs 10-222A/1 as shown.
- Remove power assisted steering reservoir and place to side.
- Remove upper securing bolt from lower toothed belt guard under engine mounting.
- Take-up weight of engine, and remove right engine mounting as follows.

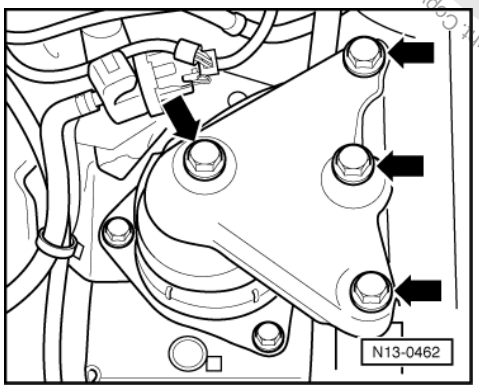

- -> Remove securing bolts from assembly mounting/engine mounting, assembly mounting/body and assembly mounting/body mounting -arrows- and remove assembly mounting complete.
- Remove engine bracket on cylinder head.
- Remove right insulation tray.
- Lower engine until the pulley securing bolt is accessible.

Protected by copyright. Copyright by Volkswagen AG.
Copyright by Volkswagen AG. Volkswagen AG does not guarantee or accept any liability with respect to the correctness of information in this document. Copying for private or commercial purposes, in whole or in part, is not permitted unless authorised by Volkswagen AG.
satelettronica

- Mark the direction of rotation of the ribbed belt and remove belt as follows.

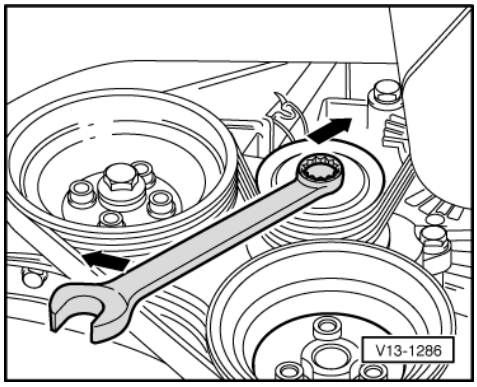

- -> Using a spanner on the securing bolt swivel tensioning roller in direction of arrow.
- Remove ribbed belt.

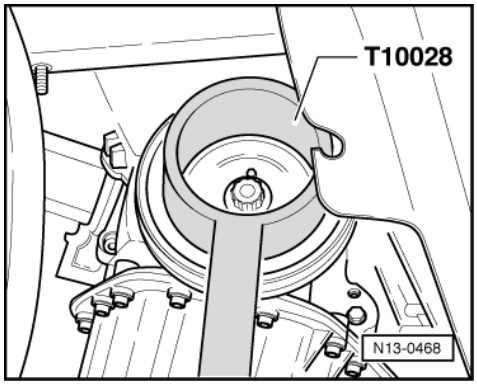

- -> Now remove V-belt pulley and toothed belt sprocket securing bolt. To do this hold the pulley with counter-hold tool T 10028.
- Remove pulley. Refit securing bolt with two washers and tighten to secure toothed belt sprocket.
- Remove idler roller on vehicles with air conditioning system and ribbed belt tensioning roller.
- Remove lower toothed belt guard.
- Mark direction of rotation of both toothed belts.

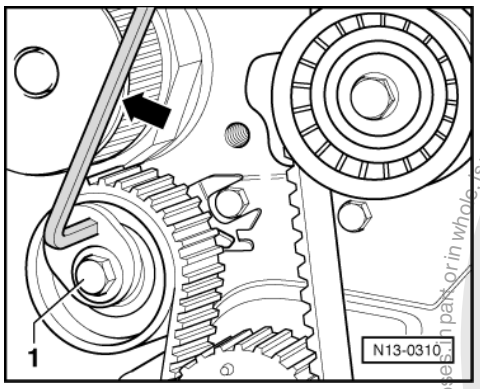

Removing main drive toothed belt:

- -> Release main drive tensioner -1- and slacken toothed belt by turning tensioning roller anti-clockwise -arrow-.
- Loosen clamping bolt on tensioning roller.
- Take off toothed belt.

Removing coupling drive toothed belt:

Protected by copyright. Copying for private or commercial purposes, in part or in whole, is not permitted unless authorised by Volkswagen AG. Volkswagen AG does not guarantee or accept any liability with respect to the correctness of information in this document. Copyright by Volkswagen AG.
satelettronica

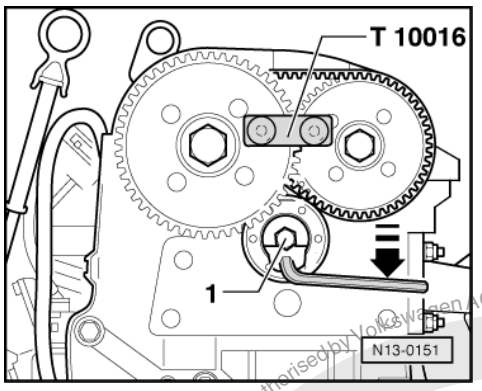

- -> Loosen coupling drive tensioner -1- and slacken toothed belt by turning tensioning roller clockwise.
- Remove coupling drive tensioning roller.
- Take off toothed belt.

Installing

Prerequisites

- The crankshaft toothed belt sprocket is secured to the crankshaft with the securing bolt and two washers.
- The pistons must not be positioned at TDC.
- Camshaft sprockets arrested in camshaft housing fitting holes with T 10 016 and secured against turning.

Note:

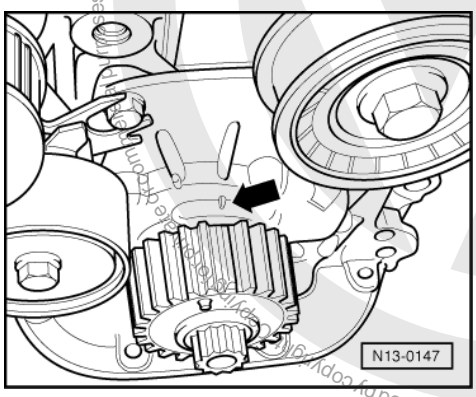

If a piston is at TDC the valves could strike the piston when turning the camshafts.

Work sequence

- -> Set the crankshaft to TDC No. 1 cylinder. The tooth with end ground down must align with the mark on the sealing flange.
- Fit coupling drive toothed belt on in an anti-clockwise direction starting at top on exhaust camshaft sprocket and then onto inlet camshaft sprocket. The untensioned section of the toothed belt must be downwards. Note direction of rotation with used belts.

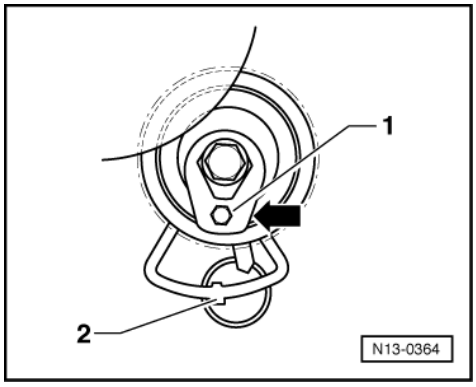

Copyright by Volkswagen AG. Volkswagen AG does not guarantee or accept any liability with respect to the correctness of information in this document. Copyright by Volkswagen AG. Reproduced by copyright permission of Volkswagen AG. Not permitted for commercial use, in part or in whole, not permitted for other purposes without authorised by Volkswagen AG.
satelettronica

Install coupling drive tensioning roller as follows:

- -> Turn coupling drive tensioning roller clockwise towards marking window -arrow- using a hexagon key -1- (tensioning roller in untensioned position).
- Press lower section of coupling drive toothed belt upwards with tensioning roller and fit tensioning roller securing bolt.
- Tighten securing bolt hand tight. The lug in the base plate must engage in the hole in the cylinder head -2-.

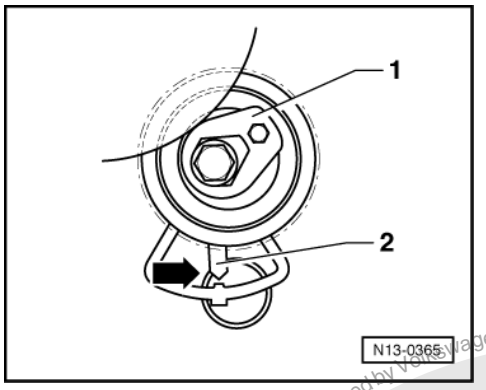

- -> Then tension toothed belt by turning tensioning roller anti-clockwise, with a hexagon key item -1-, until the indicator -2- aligns over the lug in the base plate in the marking window -arrow-.
- Tighten clamping nut on tensioning roller.
  Tightening torque: 20 Nm

Note:

The camshaft must be secured against turning by the tool until the main drive toothed belt is fitted.

- Fit main drive toothed belt on in an anti-clockwise direction starting at water pump then via tensioning roller, crankshaft, idler roller and inlet camshaft sprocket. Note direction of rotation with used belts.

If tensioning roller was removed beforehand, install tensioning roller as follows:

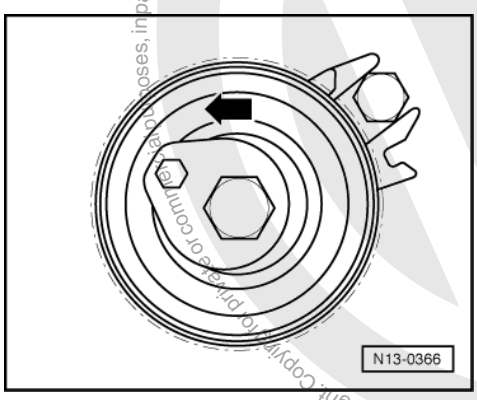

- -> Turn main drive tensioning roller anti-clockwise to following position -arrow- using a hexagon key.

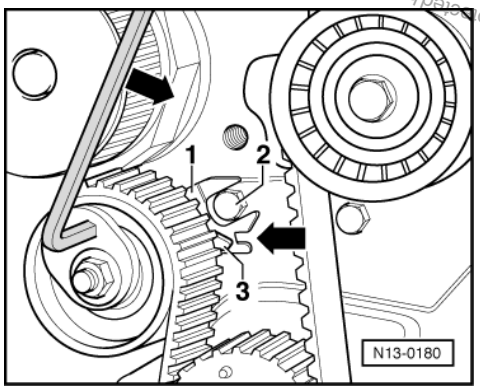

Protected by copyright. Copying for private or commercial purposes, in part or in whole, is not permitted unless authorised by Volkswagen AG. Volkswagen AG does not guarantee or accept any liability with respect to the correctness of information in this document. Copyright by Volkswagen AG.
satelettronica

- -> Tighten securing bolt hand tight. The base plate -1- cut-out must engage over securing bolt -2-.
- Loosen securing bolt on used tensioning roller.
- Then tension toothed belt by turning the tensioning roller in direction of arrow until the indicator -3- aligns with the groove in the base plate -arrow-.
- Tighten clamping nut on tensioning roller.
  Tightening torque: 20 Nm
- Remove tool from camshaft sprockets.
- Now turn the crankshaft two turns in engine direction of rotation until it is again at top dead centre No. 1 cylinder.
- Now the position of the toothed belts and tensioning roller must be checked again.
- Tension toothed belt again if necessary.
- Refit toothed belt guard.
- Refit crankshaft belt pulley. When doing this note the following:
  - The pulley and toothed belt sprocket securing bolt must be renewed.
  - When installing the pulley observe the fixing arrangement to toothed belt sprocket.
  - Tightening procedure for the new oiled bolt: 90 Nm + 1/4 turn (90°) further.
- Fit right engine bracket to cylinder block.
  Tightening torque: 50 Nm.
- Install engine mounting.

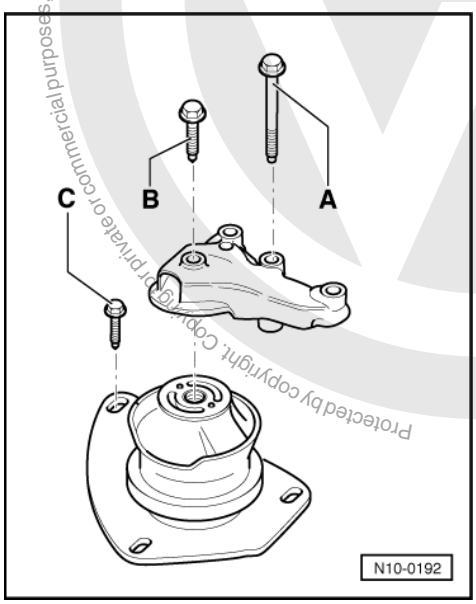

Tightening torques

Note:

The bolts must not be used again.

-> Engine mounting

A = 40 Nm + 1/4 turn (90°) further
B = 50 Nm
C = 20 Nm + 1/8 turn (45°) further

- Install power assisted steering reservoir.
- Install ribbed belt again.

Note:

When installing the ribbed belt ensure that it sits correctly in the pulleys.

- Install noise insulation tray.
- Interrogate fault memory:

Protected by copyright. Copyright by Volkswagen AG. Volkswagen AG does not guarantee or accept any liability with respect to the correctness of information in this document. Copyright by Volkswagen AG. Copying for private or commercial purposes, in part or in whole, is not permitted unless authorised by Volkswagen AG.
satelettronica

=> Repair group 01; Fault memory; Interrogating and erasing fault memory Fault memory Interrogating and erasing fault memory

1.5 - Checking semi-automatic toothed belt tensioning roller

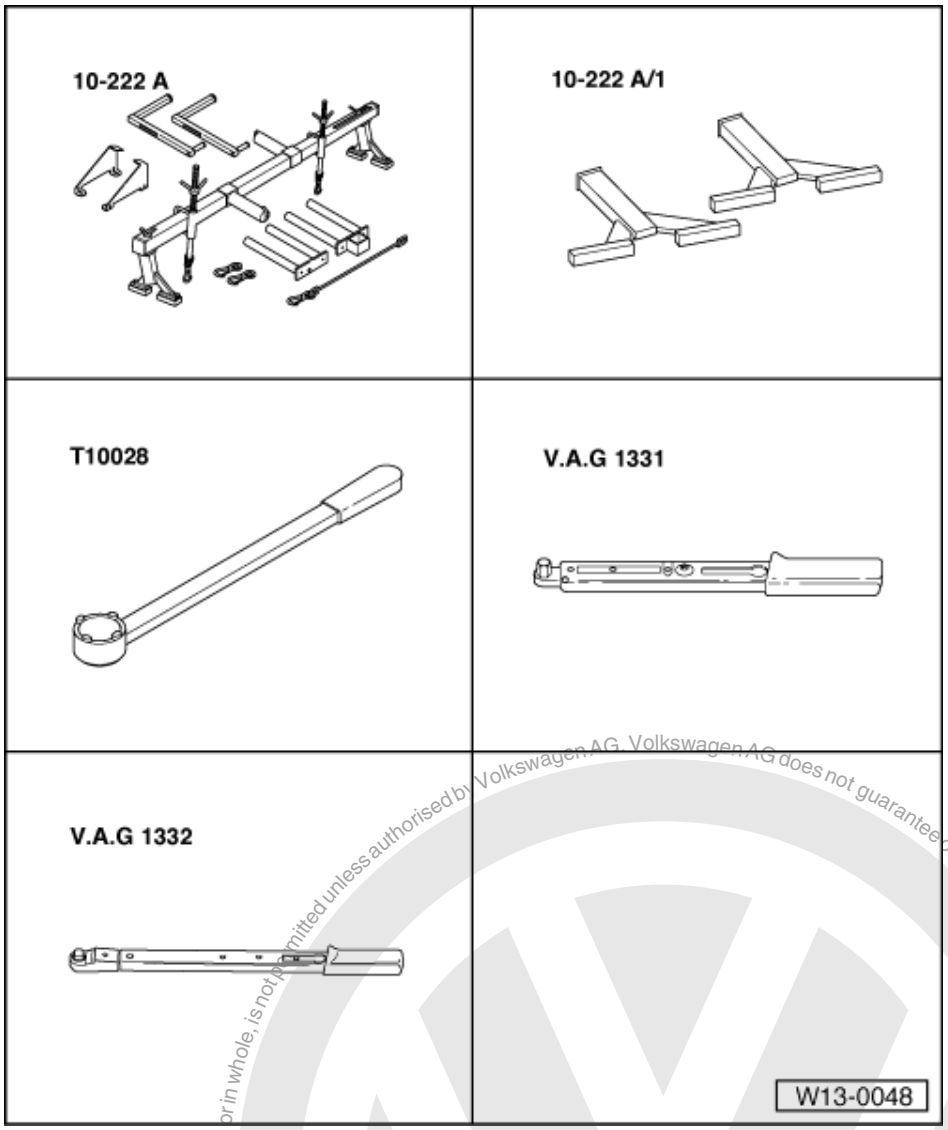

Special tools, workshop equipment, test and measuring appliances and auxiliary items required

- 10-222A Support bracket
- 10-222A/1 Support for support bracket
- T 10028 Counter-hold
- V.A.G 1331 Torque wrench (5...50 Nm)
- V.A.G 1332 Torque wrench (40...200 Nm)

Protected by copyright. Copying for private or commercial purposes, in part or in whole, is not permitted unless authorised by Volkswagen AG. Volkswagen AG does not guarantee or accept any liability with respect to the correctness of information in this document. Copyright by Volkswagen AG.
satelettronica

Checking main drive tensioning roller:

Test sequence

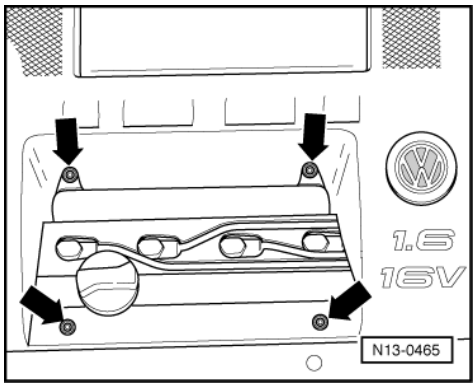

- -> Remove cover above camshaft housing -arrows-.
- Remove air cleaner:

=> Repair group 24; Servicing injection; Dismantling and assembling air cleaner Servicing injection Dismantling and assembling air cleaner

- Remove the toothed belt guard upper part.

The engine must be lowered slightly as follows to enable the crankshaft sprocket to be removed:

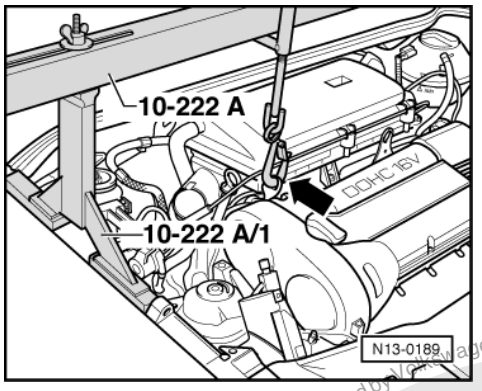

- -> Fit support 10-222A with legs 10-222A/1 as shown.
- Remove power assisted steering reservoir and place to side.
- Remove upper securing bolt from lower toothed belt guard under engine mounting.
- Take-up weight of engine and remove right engine mounting as shown.

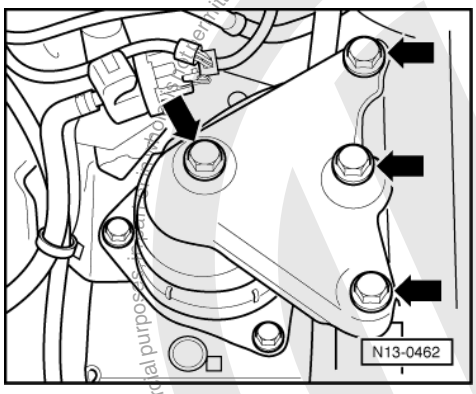

- -> Remove securing bolts from assembly mounting/engine mounting, assembly mounting/body and assembly mounting/body mounting -arrows- and remove assembly mounting complete.
- Remove engine bracket on cylinder head.
- Remove right insulation tray.
- Lower engine until the pulley securing bolt is accessible.

satelettronica
Protected by copyright. Copying for private or commercial purposes, in part or in whole, is not permitted unless authorised by Volkswagen AG. Volkswagen AG does not guarantee or accept any liability with respect to the correctness of information in this document. Copyright by Volkswagen AG.

- Mark ribbed belt direction of rotation.

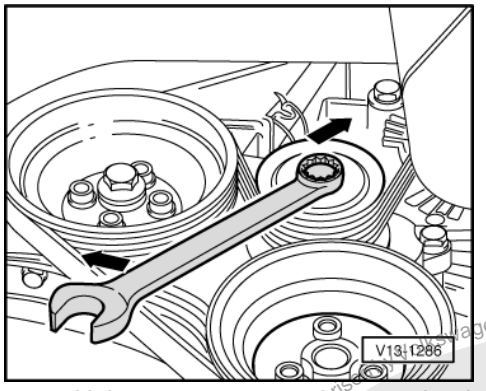

- -> Using a spanner on the securing bolt swivel tensioning roller in direction of arrow.
- Remove ribbed belt.

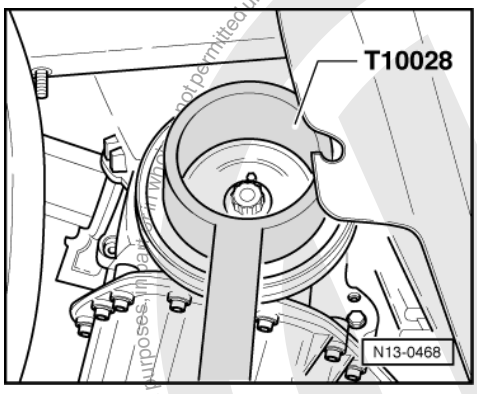

- -> Now remove V-belt pulley and toothed belt sprocket securing bolt. To do this hold the pulley with counter-hold tool T 10028.
- Remove pulley. Refit securing bolt with two washers and tighten to secure toothed belt sprocket.
- Now turn the crankshaft two turns in engine direction of rotation until it is again at top dead centre No. 1 cylinder.

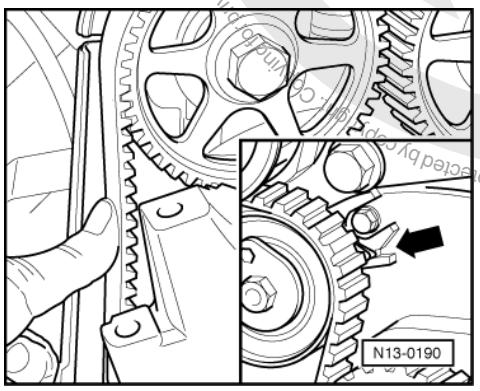

- -> Note the position of the tensioning roller indicator -arrow-. Press the toothed belt with firm thumb pressure. The indicator must move.
- Release tension on toothed belt.
- Turn crankshaft two turns in engine direction of rotation.
- Then check the position of the indicator. It must have returned to its original position.

If tensioning roller does not return to initial position:

- Replace tensioning roller.

satelettronica

Checking coupling drive tensioning roller:

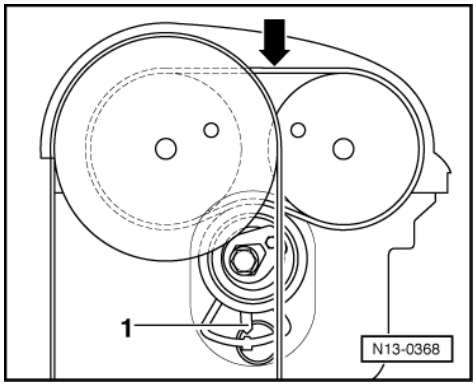

- -> Note the position of the tensioning roller indicator -1-. Press the toothed belt with firm thumb pressure -arrow-. The indicator must move.
- Release tension on toothed belt.
- Turn crankshaft two turns in engine direction of rotation.
- Then check the position of the indicator. It must have returned to its original position.

If tensioning roller does not return to initial position:

- Replace tensioning roller.

If both tensioning rollers are OK:

- Refit toothed belt guard.
- Refit crankshaft belt pulley. When doing this note the following:
  - The pulley and toothed belt sprocket securing bolt must be renewed.
  - When installing the pulley observe the fixing arrangement to toothed belt sprocket.
  - Tightening procedure for the new oiled bolt: 90 Nm + 1/4 turn (90°) further.
- Install engine bracket.
- Install engine mounting.

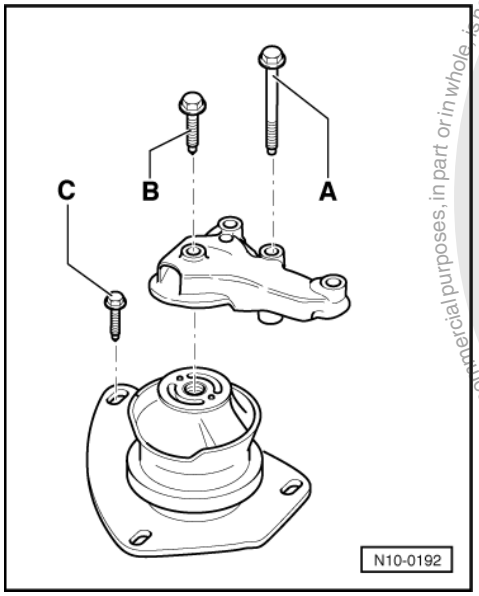

Tightening torques

Note:

The bolts must not be used again.

satelettronica
Protected by copyright. Copying for private or commercial purposes, in part or in whole, is not permitted unless authorised by Volkswagen AG. Volkswagen AG does not guarantee or accept any liability with respect to the correctness of information in this document. Copyright by Volkswagen AG.

-> Engine mounting

A = 40 Nm + 1/4 turn (90°) further
B = 50 Nm
C = 20 Nm + 1/8 turn (45°) further

- Install power assisted steering reservoir.
- Refit the ribbed belt and the cover.

Note:

When installing the ribbed belt ensure that it sits correctly in the pulleys.

- Install noise insulation tray.

2 - Dismantling and assembling cylinder block, crankshaft and flywheel

2.1 - Dismantling and assembling cylinder block, crankshaft and flywheel

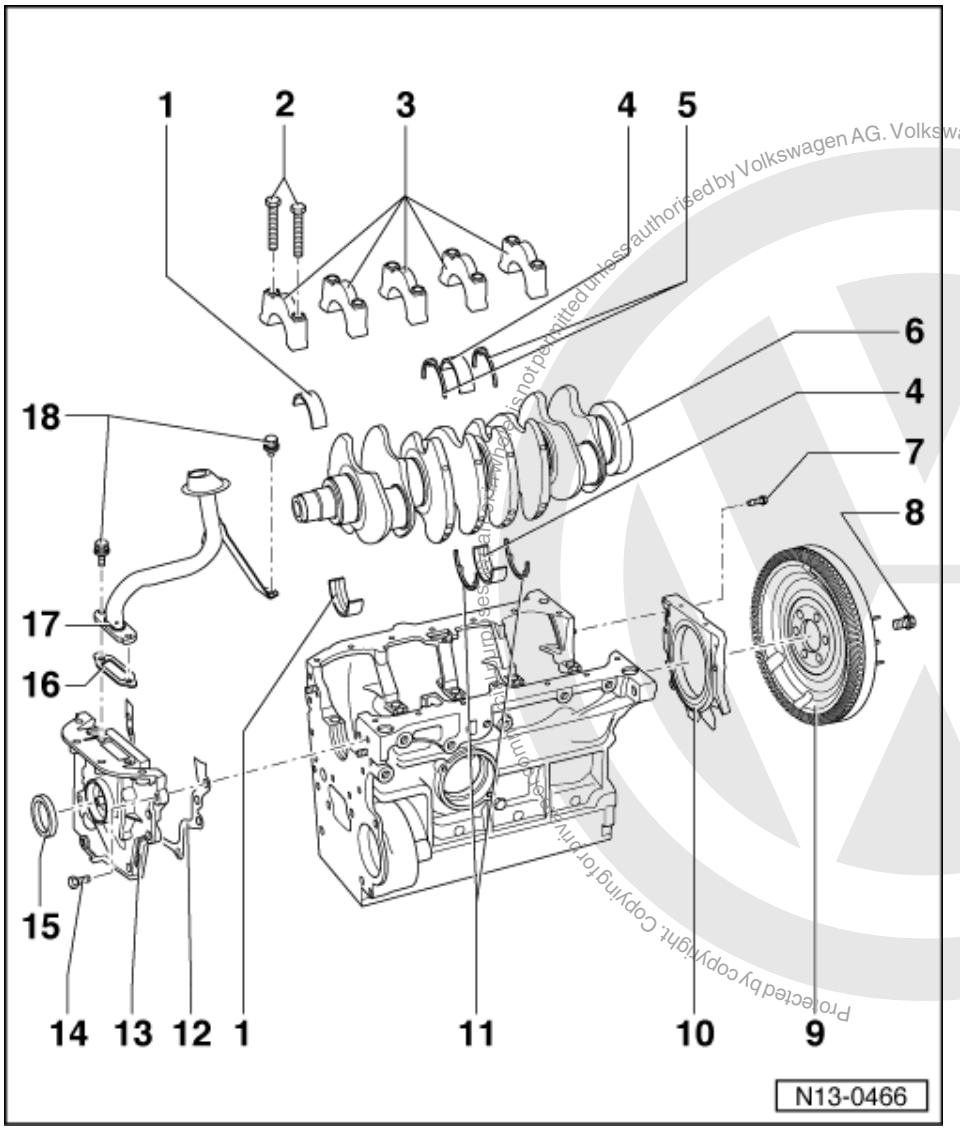

1 Bearing shells 1, 2, 4 and 5
- Do not interchange used bearing shells (mark)

2 65 Nm

satelettronica
Protected by copyright. Copying for private or commercial purposes, partially or completely, is not permitted unless authorised by Volkswagen AG. Volkswagen AG does not guarantee or accept any liability with respect to the correctness of information in this document. Copyright by Volkswagen AG.

3 Bearing cap
- Do not interchange bearing caps (mark)
- Bearing cap 3 with recesses for thrust washers
- Bearing shell retaining lugs (cylinder block/bearing cap) must be on the same side

4 Bearing shell 3

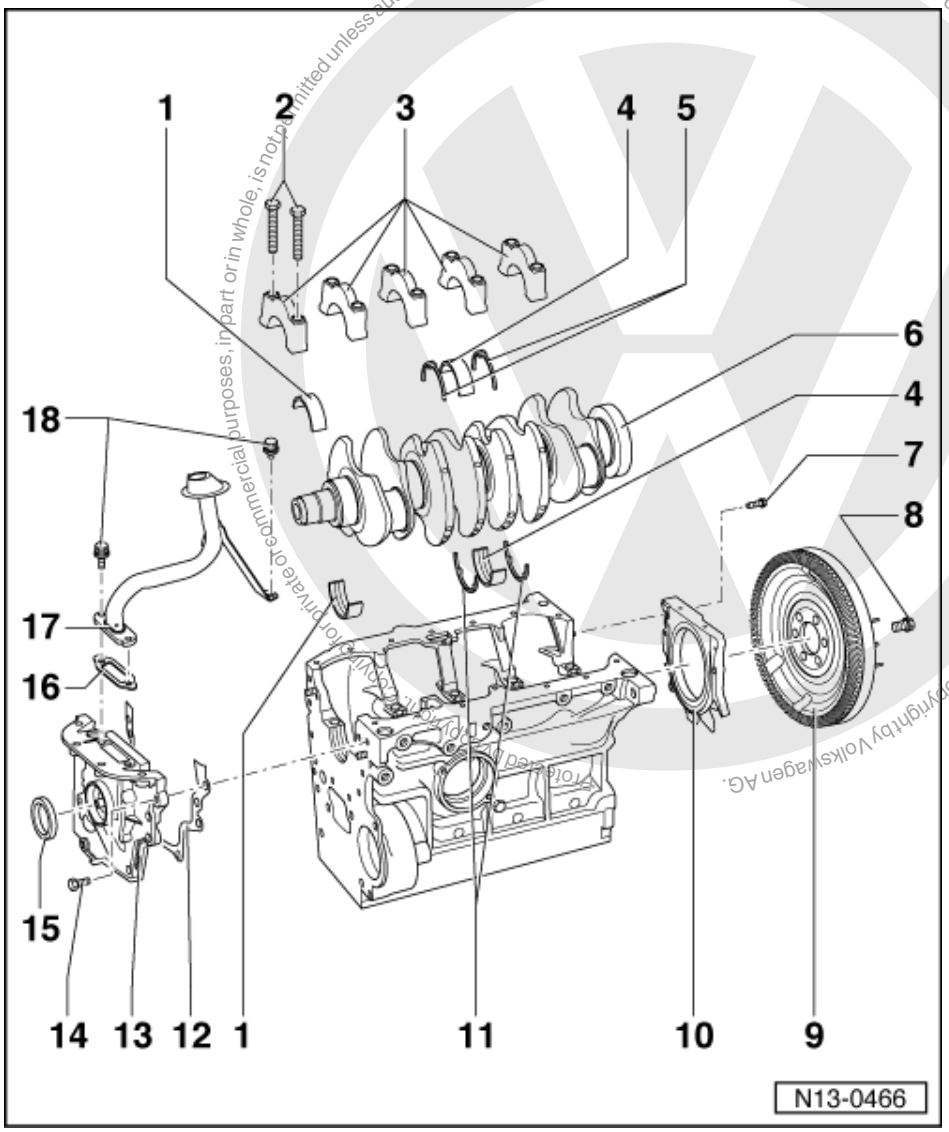

5 Thrust washer
- For bearing cap 3
- Note fixing arrangement

6 Crankshaft
- Axial clearance new: 0.07...0.18 mm
  Wear limit: 0.20 mm
- Check radial clearance with Plastigage
  New: 0.03...0.08 mm
  Wear limit: 0.17 mm
- Do not rotate the crankshaft when checking the radial clearance
- Crankshaft dimensions
  => Page 39

7 10 Nm

8 60 Nm + 1/4 turn (90 °) further
- Renew

9 Flywheel

Copyright by Volkswagen AG. Not for commercial purposes, in part or in whole, is not permitted unless authorised by Volkswagen AG. Volkswagen AG does not guarantee or accept any liability with respect to the correctness of information in this document.
satelettronica

- To remove and install counter-hold with 10-201

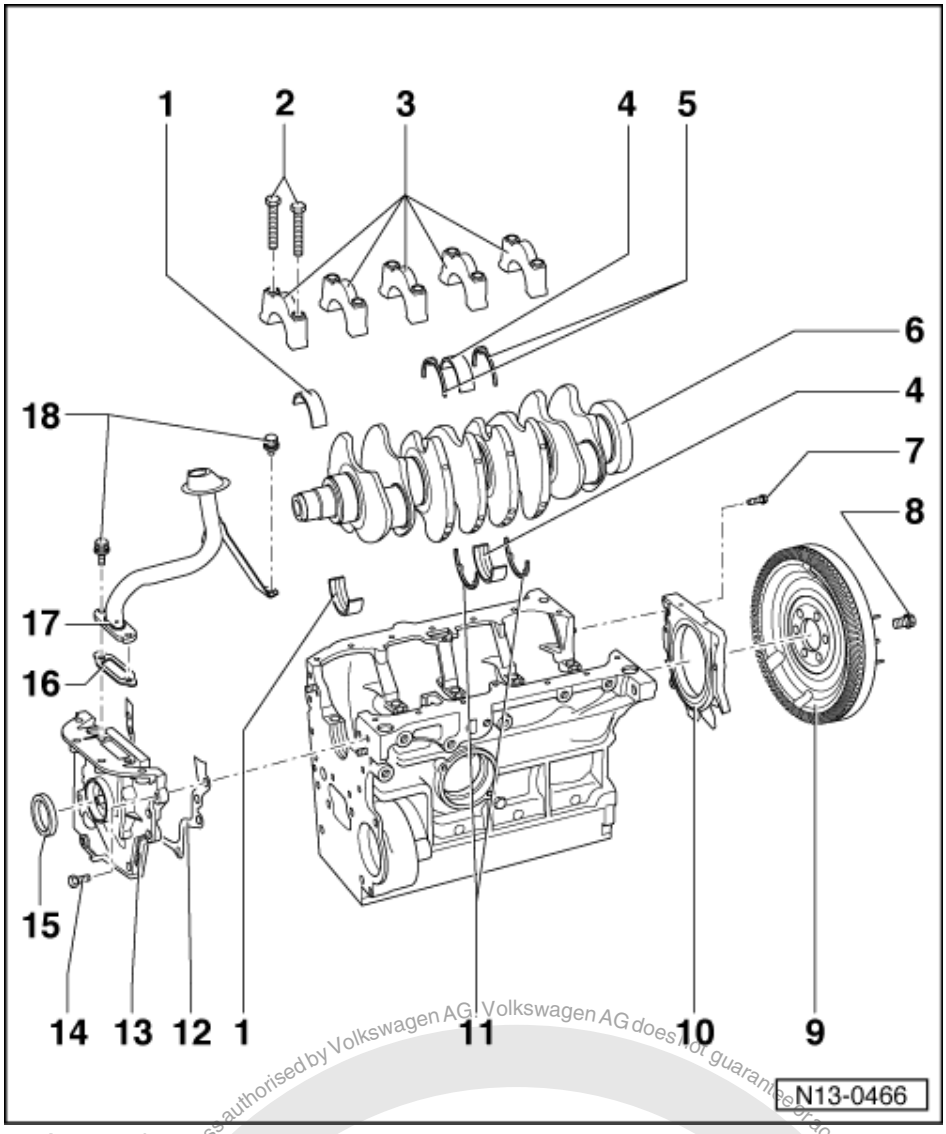

10 Sealing flange with oil seal
- Only renew complete with oil seal and sender wheel
- Removing and installing sealing flange =>Page 42

11 Thrust washer
- For cylinder block, bearing 3

12 Gasket
- Renew

13 Sealing flange/oil pump
- Removing and installing oil pump => Page 99

14 12 Nm
- Renew

satelettronica
Protected by copyright. Copying for private or commercial purposes, partially or completely is not permitted unless authorised by Volkswagen AG. Volkswagen AG does not guarantee or accept any liability with respect to the correctness of information in this document. Copyright by Volkswagen AG.

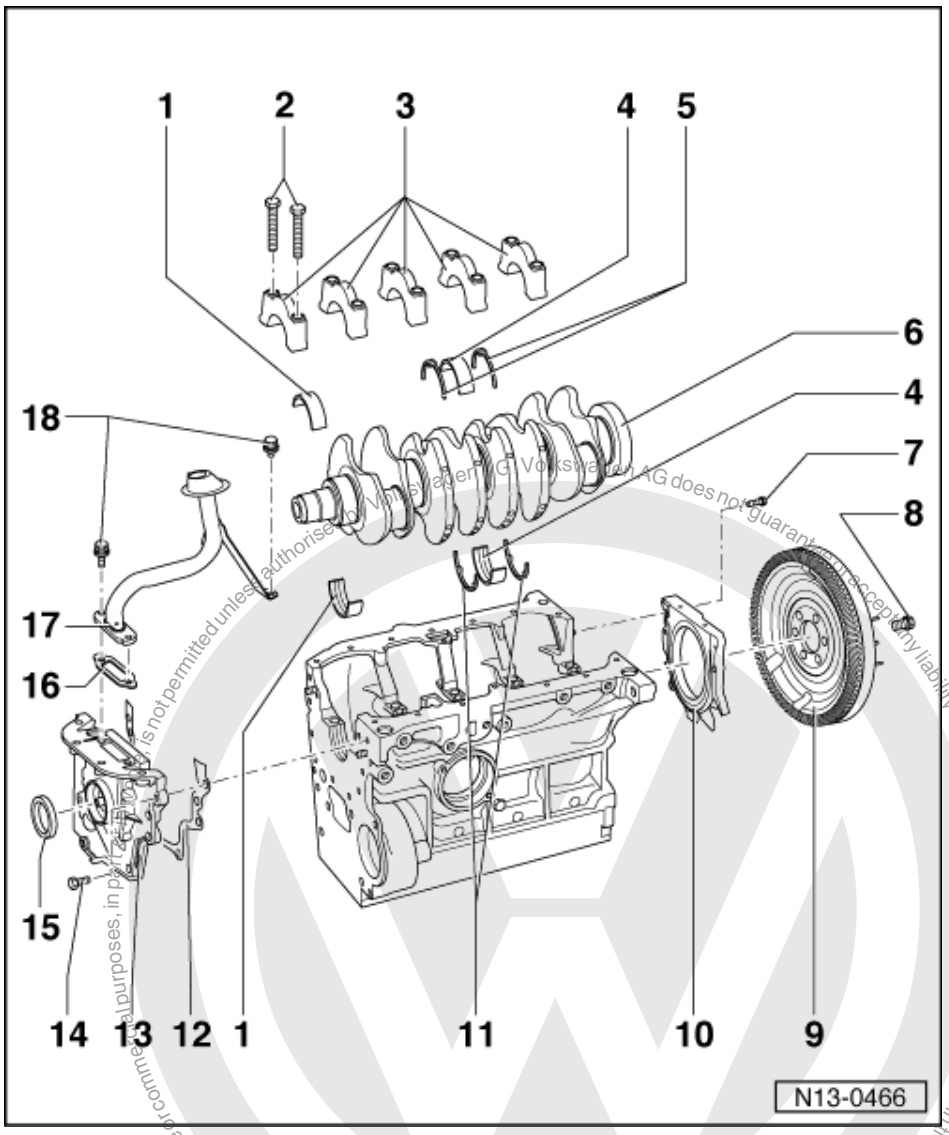

15 Oil seal
- Renewing => Page 40

16 Gasket
- Renew

17 Suction pipe

18 10 Nm

2.2 - Crankshaft dimensions

Honing dimension in mm	Crankshaft main journal ø	Conrod journal ø
Basic dimension	-0.017 54.00 -0.032	-0.022 47.80 -0.037
1st undersize	-0.017 53.75 -0.032	-0.022 47.55 -0.037
Stage II	-	-0.022 47.30 -0.037

satelettronica

Honing dimension in mm	Crankshaft main journal ø	Conrod journal ø
Stage III	-	-0.022 47.05 -0.037

2.3 - Renewing crankshaft oil seal -belt pulley end-

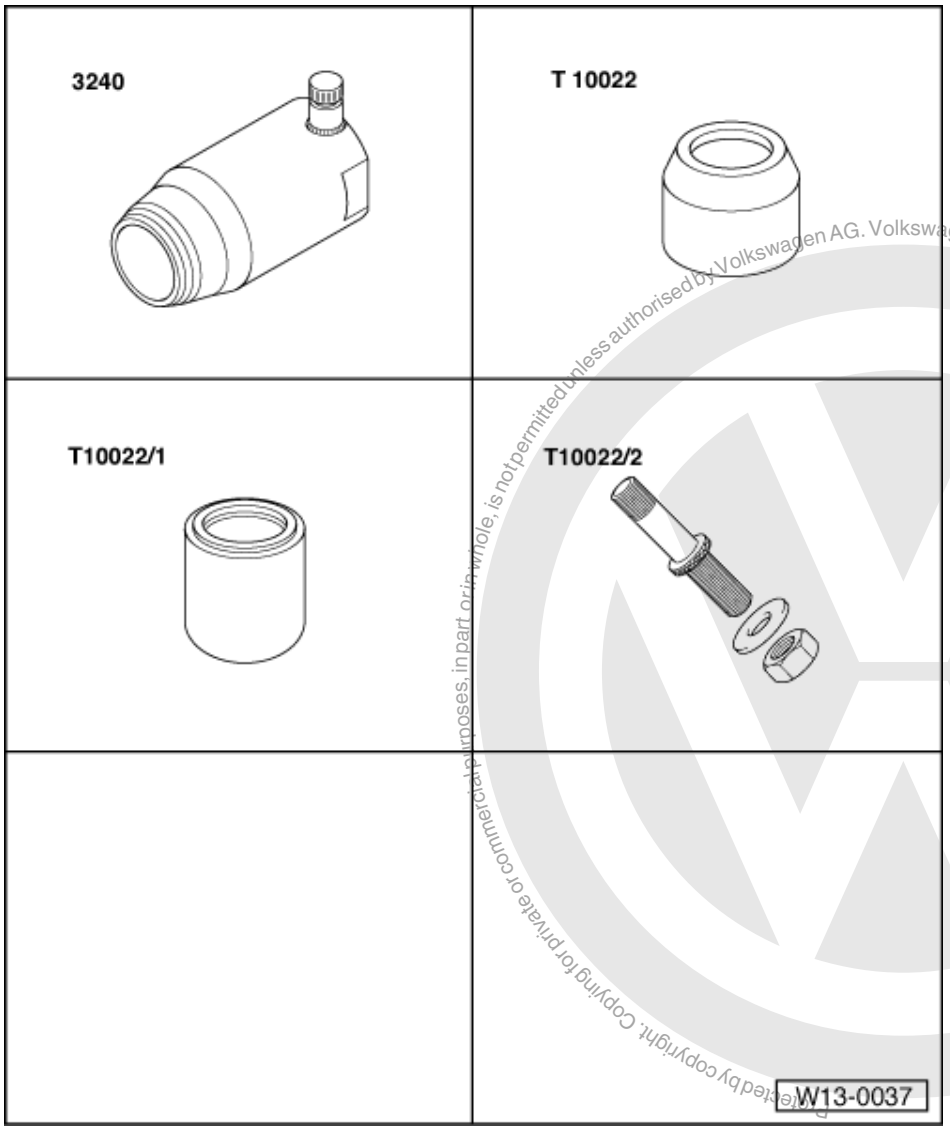

Protected by copyright. Copying for private or commercial purposes, in part or in whole, is not permitted unless authorised by Volkswagen AG. Volkswagen AG does not guarantee or accept any liability with respect to the correctness of information in this document. Copyright by Volkswagen AG.
satelettronica

Special tools, workshop equipment, test and measuring appliances and auxiliary items required

- 3240 Oil seal extractor
- T10022 Sleeve
- T10022/1 Press piece
- T10022/2 Spindle

Removing

- First remove main drive toothed belt
  => Page 25 .
- Then remove the crankshaft toothed belt sprocket.

- To guide oil seal extractor screw crankshaft sprocket securing bolt into crankshaft onto stop.

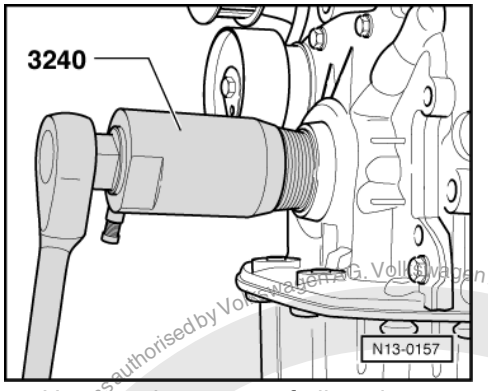

- Unscrew inner part of oil seal extractor 3240 two turns (approx. 3 mm) out of the outer part and lock with knurled screw.
- -> Lubricate threaded head of oil seal extractor, place it in position and exerting firm pressure screw it as far as possible into oil seal.
- Loosen knurled screw and turn inner part against crankshaft until the oil seal is pulled out.

Installing

- Lightly oil sealing lip of oil seal.

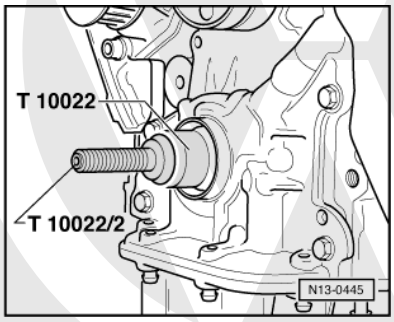

- -> Fit sleeve T10022 onto crankshaft journal and turn spindle T10022/2 in onto stop.
- Slide oil seal over sleeve T10022.

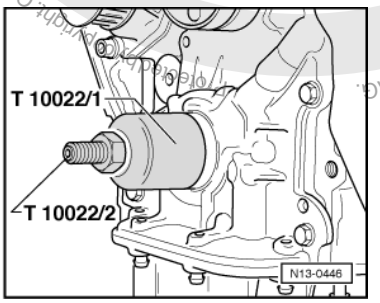

- -> Press in oil seal onto stop with press piece T10022/1.
- Install main drive toothed belt => Page 25 .

satelettronica

2.4 - Renewing crankshaft sealing flange -flywheel end-

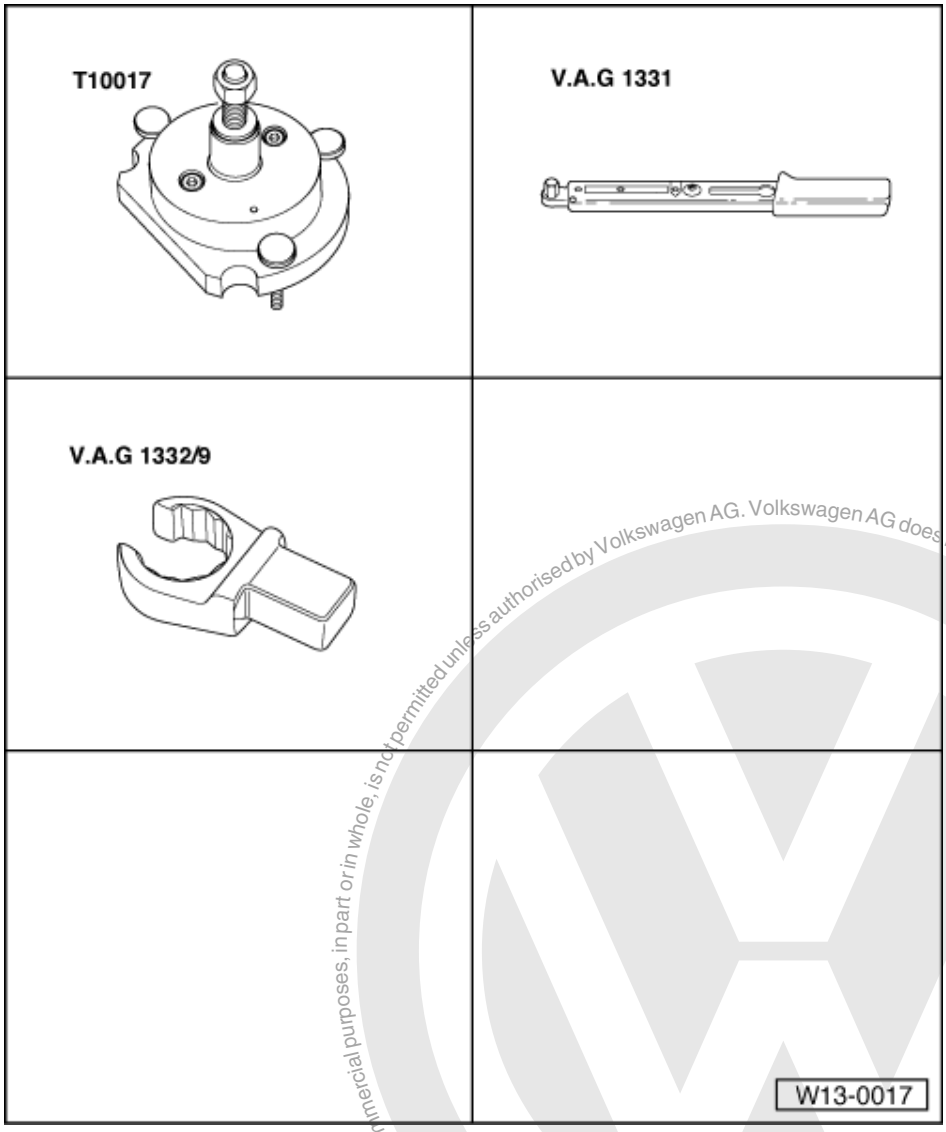

Special tools, workshop equipment, test and measuring appliances and auxiliary items required

- T10017 Assembly device
- V.A.G 1331 Torque wrench (5...50 Nm)
- V.A.G 1332/9 Open ring spanner
- Hexagon bolts (Qty. 3)
  M6 x 35 mm
- Feeler gauge
- Vernier gauge

Pressing out sealing flange with sender wheel

Notes:

- To enable the work sequence to be shown more clearly the sequence is described as for engine removed.
- The work sequence is the same when the engine is in the vehicle and the gearbox removed.

Work sequence

- Remove pressure plate.
- Remove flywheel.

Protected by copyright. Copying for private or commercial purposes, in part or in whole, is not permitted unless authorised by Volkswagen AG. Volkswagen AG does not guarantee or accept any liability with respect to the correctness of information in this document. Copyright by Volkswagen AG.
satelettronica

- Remove the intermediate plate.

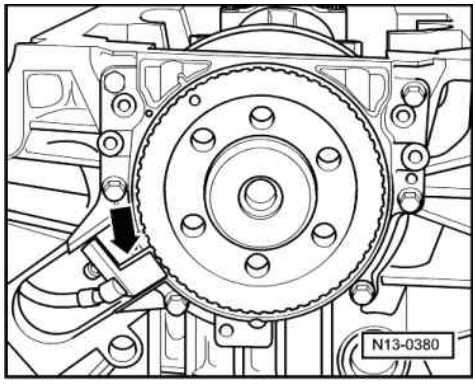

- Set engine to TDC No. 1 cylinder =>Page 23 , Checking valve timing.
- Remove oil sump =>Page 97 .
- -> Remove engine speed sender -arrow-.
- Undo sealing flange securing bolts.

Note:

Sealing flange and sender wheel are pressed off the crankshaft together with Qty. 3 M6 x 35 mm bolts.

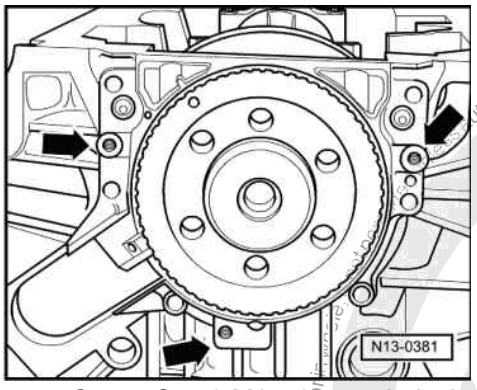

- -> Screw Qty. 3 M6 x 35 mm bolts into the threaded holes -arrows- of the sealing flange.
- Screw the bolts alternately (a 1/2 turn(180°) for each bolt) into the sealing flange and press the sealing flange along with the sender wheel off the crankshaft.

Pressing in sealing flange with sender wheel

Notes:

- Gradual introduction of a new generation of sealing flanges with PTFE seal (Teflon). The sealing flange with spring ring will continue to be offered as spare part.
  When fitting a new sealing flange, be careful to use the same type of sealing flange that was previously fitted.
- The sealing flange with a PTFE sealing ring is equipped with a sealing lip support ring. This support ring serves the function of a fitting sleeve and may not be removed prior to installation.
- Sealing flange and sender wheel must not be separated or twisted after removal from packaging.
- The sender wheel of a sealing flange with spring ring has an Elastomer coating on the sealing surface to crankshaft. This coating must never come into contact with dirt or grease.

- The sender wheel is held in its installation position by a fixture on the assembly device T10017 locating pin.
- Sealing flange and seal are one unit and must be replaced together with the sender wheel only.

satelettronica

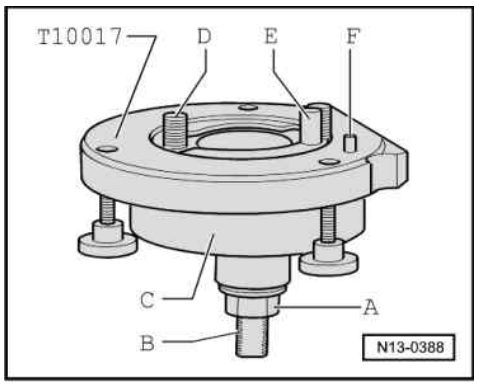

- The assembly appliance T10017 maintains its installation position to the crankshaft via a guide pin which is inserted into a threaded hole in the pressure plate/drive plate.

-> A - Hexagon nut

B - Clamping surface (ground section of spindle)

C - Tool bell housing

D - Socket head bolt

E - Guide pin

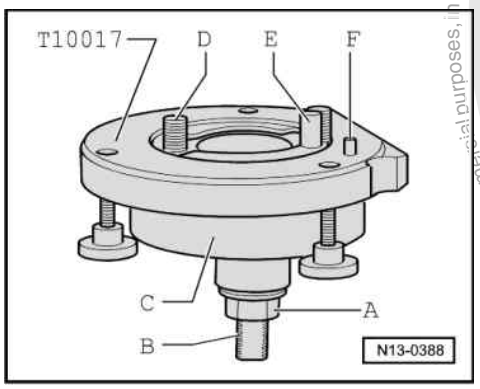

F - Locating pin

A-Assembling sealing flange with sender wheel on assembly appliance T10017

- -> Screw hexagon nut -A- to shortly before the clamping surface (ground section) -B- on the threaded spindle.

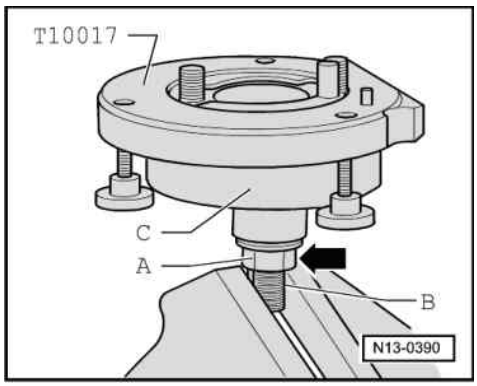

- -> Clamp assembly appliance T10017 in a vice on clamping surface (ground section) on threaded spindle.

Protected by copyright. Copying for private or commercial purposes, in part or in whole, is not permitted unless authorised by Volkswagen AG. Volkswagen AG does not guarantee or accept any liability with respect to the correctness of information in this document. Copyright by Volkswagen AG.
satelettronica

- Press assembly bell housing -C- downwards so that it lies on the hexagon nut -A- -arrow-.

Note:

Inner part of assembly appliance and assembly bell housing must be at same height (level).

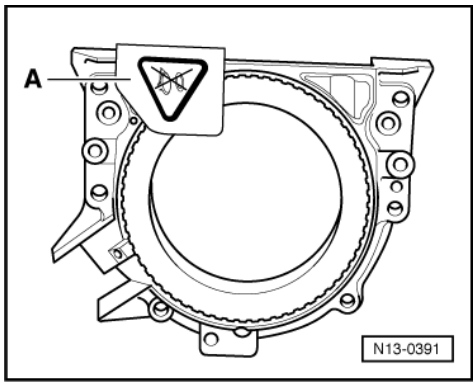

- -> Remove securing clip -A- on new sealing flange.

Note:

The sender wheel must not be taken out of the sealing flange or twisted.

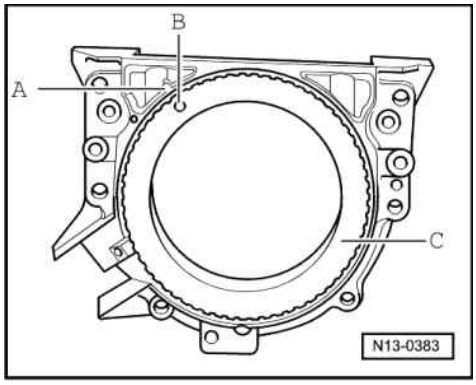

-> The locating hole -B- on the sender wheel -C- must align with the marking -A- on the sealing flange.

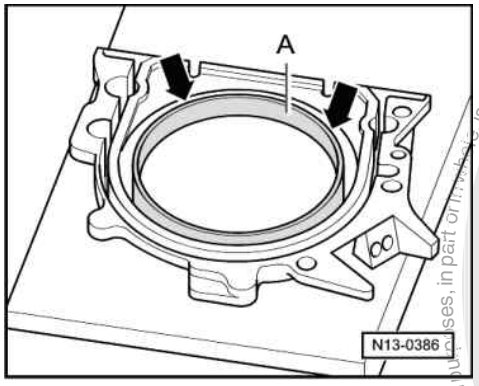

- -> Place the sealing flange (with the forward side downwards) on a clean flat surface.
- Push the sender wheel (sealing lip support ring for PTFE sealing ring) -A- downwards in direction of arrow until it lies on the flat surface.

satelettronica
Protected by copyright. Copying for private or commercial purposes, in part or in whole, is not permitted unless authorised by Volkswagen AG. Volkswagen AG does not guarantee or accept any liability with respect to the correctness of information in this document. Copyright by Volkswagen AG.

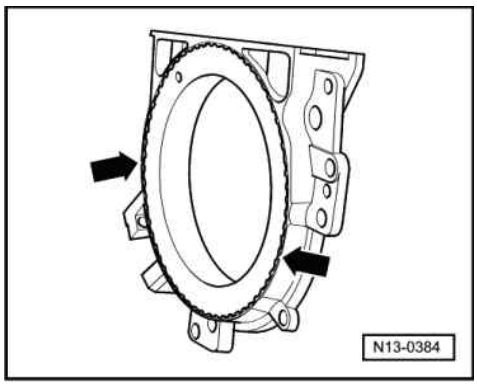

-> The upper edge of the sender wheel and the forward edge of the sealing flange must align -arrows-.

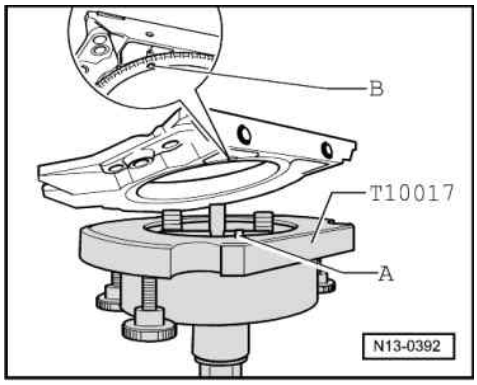

- -> Place the sealing flange, with the forward side on the assembly appliance T10017, so that the locating pin -A- can be inserted in the sender wheel hole -B-.

Note:

Ensure the sealing flange lies flat on the assembly appliance.

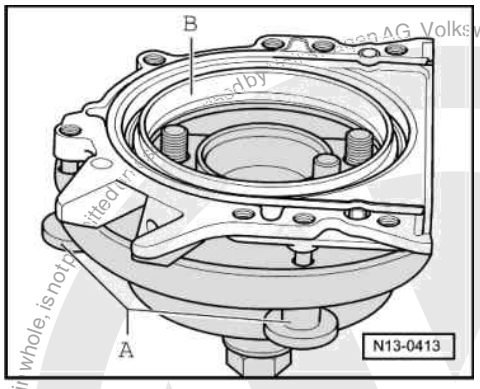

- -> Push the sender wheel -B- (Sealing lip support ring for PTFE sealing ring) onto the surface of the assembly appliance whilst tightening the three knurled screws -A-, so that the locating pin cannot slide out of sender wheel hole.

Note:

Ensure the sender wheel remains fixed on the assembly appliance when installing the sealing flange.

Volkswagen AG does not guarantee or accept any liability with respect to the correctness of information in this document. Copyright by Volkswagen AG.
Protected by copyright. Copying for private or commercial purposes, in part or in whole, is not permitted unless authorised by Volkswagen AG.
satelettronica

Volkswagen AG. Volkswagen AG does not guarantee or accept any liability with respect to the correctness of information in this document. Copyright by Volkswagen AG. Protected by copyright. Copying, distribution, publication or commercial use is not permitted unless authorised by Volkswagen AG.

B-Assembling appliance T10017 with sealing flange on crankshaft flange

Prerequisites

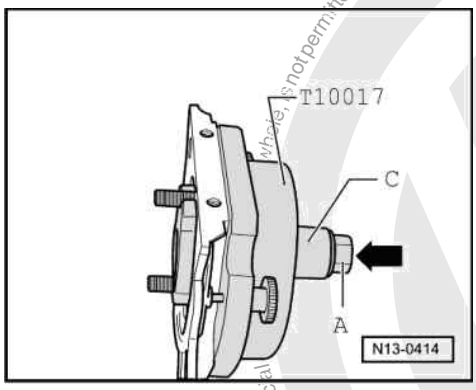

- Crankshaft flange must be free of oil and grease.
- Engine positioned at TDC No. 1 cylinder.

Work sequence

- -> Unscrew hexagon nut -A- to end of threaded spindle.
- Press assembly appliance threaded spindle in direction of arrow, until the hexagon nut -A- lies against the assembly bell housing -C-.

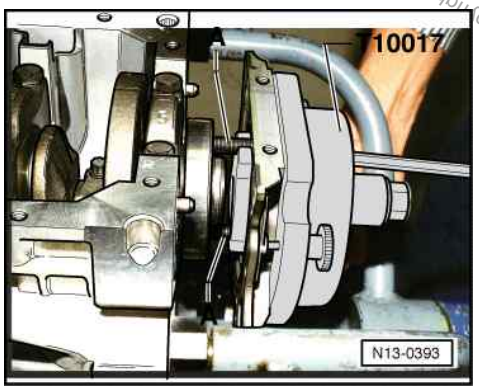

- Align flat side of assembly bell housing towards oil sump side of crankcase sealing surface.
- -> Secure assembly appliance to crankshaft flange with hexagon socket head bolts -A-

Note:

Screw hexagon socket head bolts -A- into crankshaft flange (approx. 5 threads).

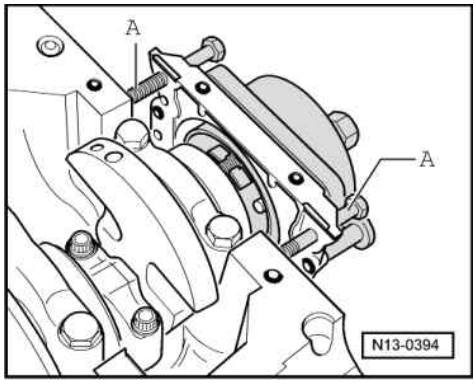

- -> Screw two M6 x 35 mm bolts -A- into cylinder block to guide sealing flange.

satelettronica

C-Fitting assembly appliance T10017 onto crankshaft flange

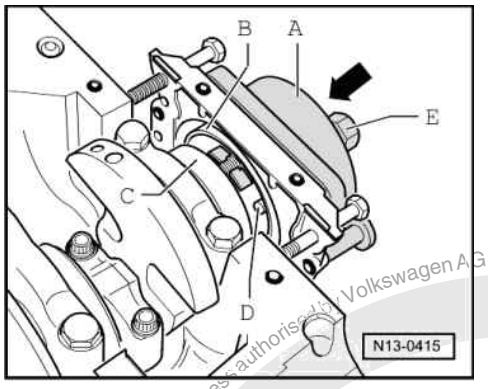

- -> Slide assembly bell housing -A- in direction of arrow by hand until the sender wheel - B- (Sealing lip support ring for PTFE sealing ring) lies against the crankshaft flange -C-.

Note:

The assembly appliance guide pin -D- is guided into threaded hole in crankshaft during the fitting sequence. This ensures the sender wheel reaches its final installation position.

- Hold assembly bell housing in this position and screw both assembly appliance hexagon socket head bolts hand tight.
- Screw hexagon nut -E- onto threaded spindle by hand until it lies against the assembly bell housing -A-.

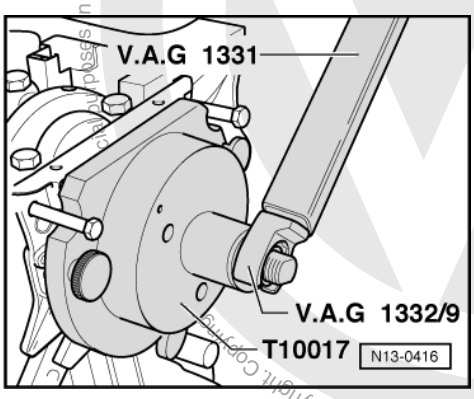

D-Pressing sender wheel onto crankshaft flange with assembly appliance T10017

- -> Tighten assembly appliance hexagon nut with torque wrench V.A.G 1331 and open jaw spanner V.A.G 1332/9.
  Tightening torque: 35 Nm

Note:

A small air gap must be present between cylinder block and sealing flange after tightening hexagon nut to 35 Nm.

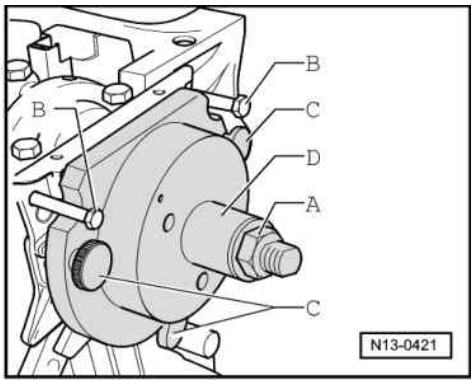

Copyright by Volkswagen AG. Volkswagen AG does not guarantee or accept any liability with respect to the correctness of information in this document. Copyright by Volkswagen AG. Protected by copyright. Copying for private or commercial purposes, in part or in whole, is not permitted unless authorised by Volkswagen AG.
satelettronica

E-Checking sender wheel installation position on crankshaft

- -> Screw hexagon nut -A- to end of threaded spindle.
- Remove the two M6 x 35 mm hexagon bolts -B- from cylinder block.
- Screw the three thumb wheels -C- out of sealing flange.
- Pull assembly appliance assembly bell housing -D- back to hexagon nut -A- (Only for sealing flange with spring ring).

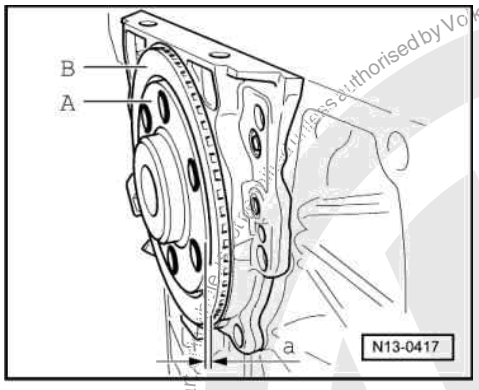

-> The sender wheel has the correct installation position on crankshaft when a gap of
-a- = 0.5 mm
exists between crankshaft flange -A- and sender wheel -B-.

Note:

If the sealing flange has a PTFE sealing ring, completely unbolt the assembly appliance T10017 and remove the sealing lip support ring.

To enable the measurements to be shown more clearly the crankshaft flange is illustrated without the fitted assembly appliance T10017.

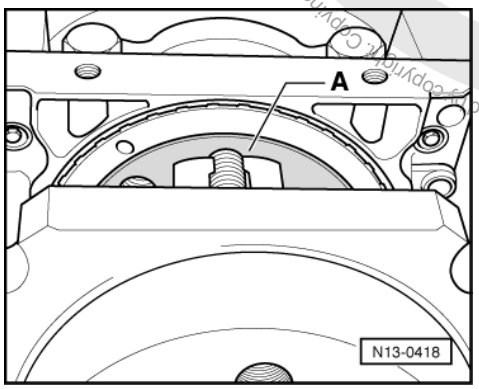

- -> Place a vernier caliper against the crankshaft flange -A- (hatched area).

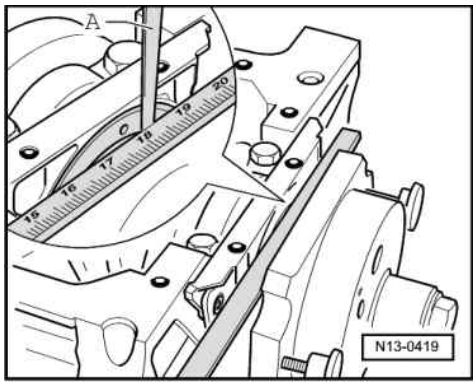

Protected by copyright. Copying for private or commercial purposes, in part or in whole, is not permitted unless authorised by Volkswagen AG. Volkswagen AG does not guarantee or accept any liability with respect to the correctness of information in this document. Copyright by Volkswagen AG.
satelettronica

- -> Measure the distance -a- between vernier caliper and sender wheel with a feeler gauge -A-.

Is measurement -a- too small:

- Re-press sender wheel =>Page 50 .

When dimension -a- is achieved:

- Remove assembly appliance.
- Tighten the new securing bolts for the sealing flange using alternate and diagonal sequence.
  Tightening torque: 12 Nm

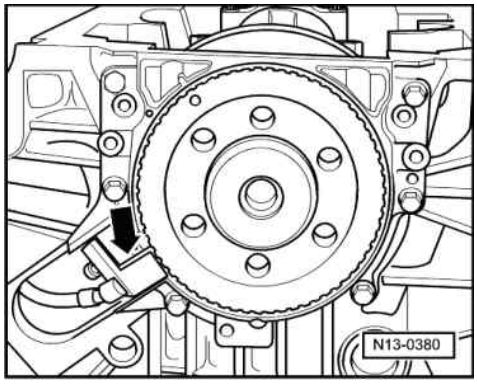

- -> Install engine speed sender -arrow-.
  Tightening torque: 5 Nm
- Install sump => Page 97 .
- Install intermediate plate.
- Install flywheel/drive plate with new bolts.

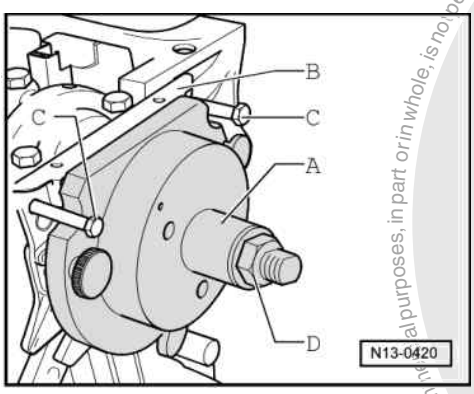

F-Re-pressing sender wheel

- -> Slide assembly bell housing -A- to sealing flange -B- by hand.
- Screw two M6 x 35 mm bolts -C- into cylinder block to guide sealing flange -B-.
- Screw hexagon nut -D- along threaded spindle, by hand, until it contacts the assembly bell housing -A-.

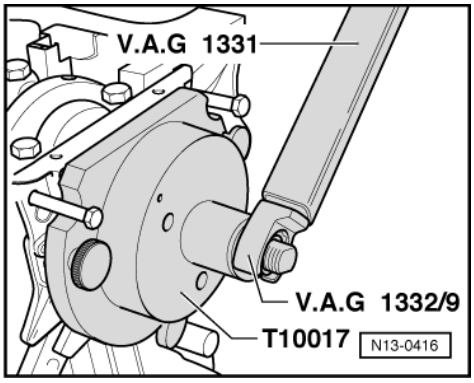

Protected by copyright. Copyright by Volkswagen AG.
Copying for private or commercial purposes, in part or in whole, is not permitted unless authorised by Volkswagen AG. Volkswagen AG does not guarantee or accept any liability with respect to the correctness of information in this document.
satelettronica

- -> Tighten assembly appliance hexagon nut with torque wrench V.A.G 1331 and open jaw spanner V.A.G 1332/9.
  Tightening torque: 40 Nm
- Check installation position of sender wheel on crankshaft again => Page 49 .

If dimension -a- is too small again:
- Tighten hexagon nut to
  45 Nm.
- Check installation position of sender wheel on crankshaft again => Page 49 .

Copyright by Volkswagen AG. Volkswagen AG does not guarantee or accept any liability with respect to the correctness of information in this document. Copying for private or commercial purposes, in part or in whole, is not permitted unless authorised by Volkswagen AG.

3 - Dismantling and assembling pistons and conrods

3.1 - Dismantling and assembling pistons and conrods

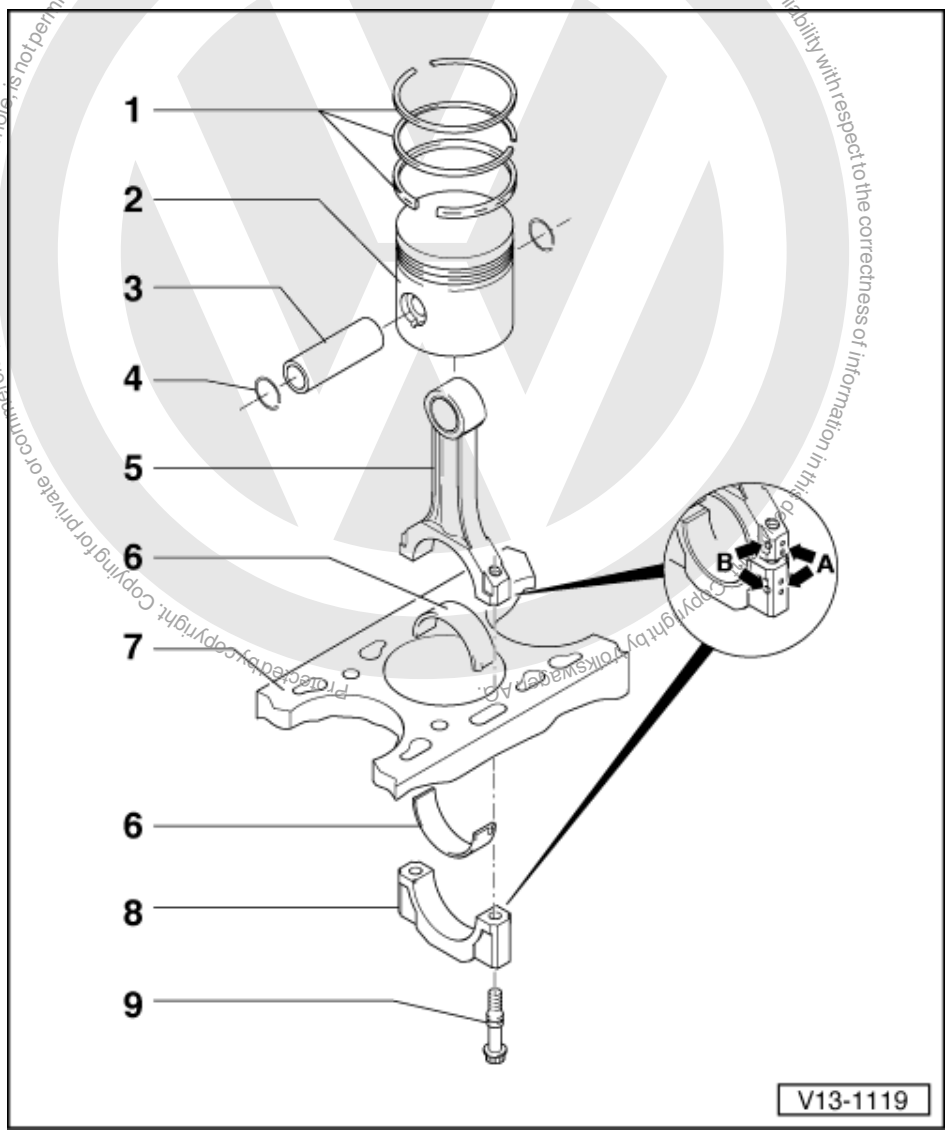

1 Piston ring
- Offset gaps by 120 °
- Remove and install with piston ring pliers
- "TOP" faces towards piston crown
- Checking ring gap=> Fig. 1
- Checking ring to groove clearance
  => Fig. 2

2 Piston

satelettronica

- Checking => Fig. 3
- Mark installation position and cylinder number
- Arrow on piston crown points to pulley end
- Install using piston ring clamp

3 Piston pin

- If difficult to remove, heat piston to 60 °C
- Remove and install with10-206

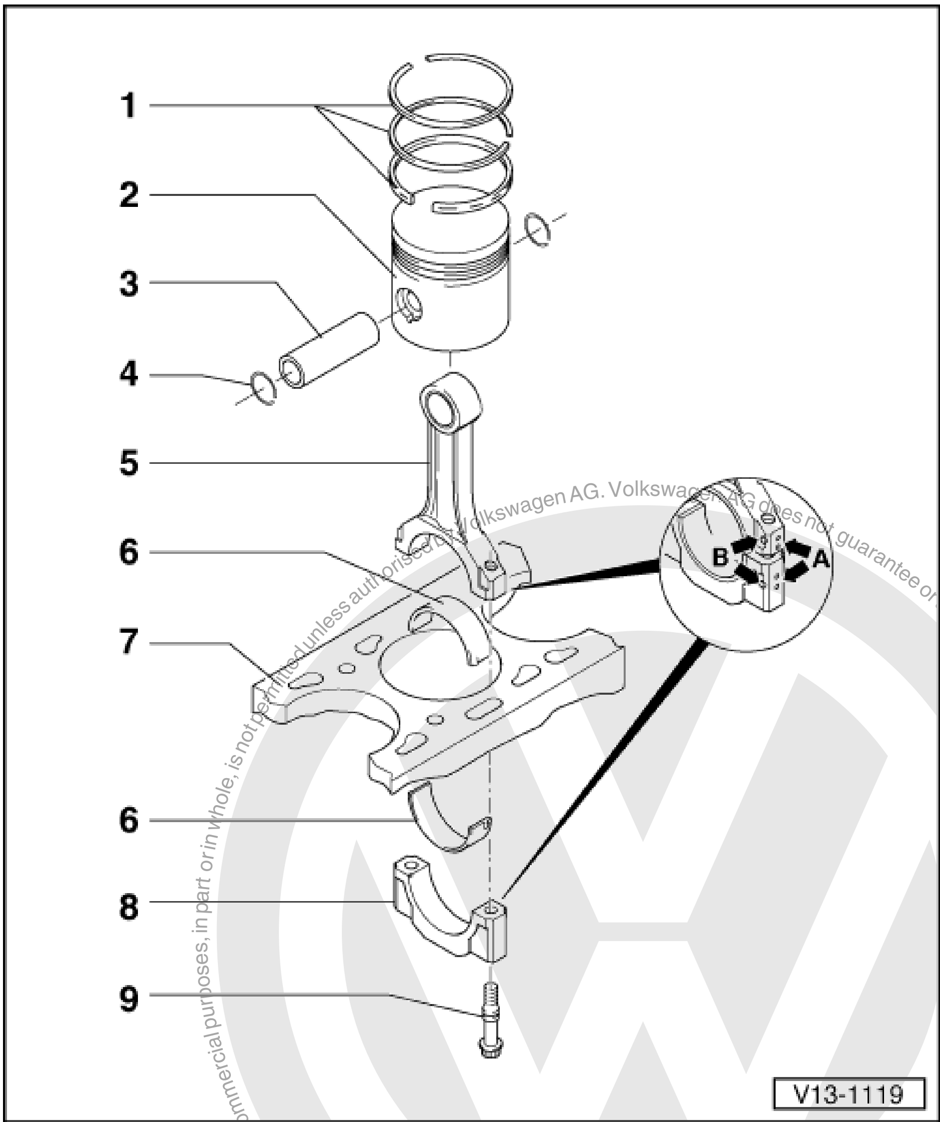

4 Circlip

5 Conrod

- Only renew as a set
- Mark cylinder number -A-
- Installation position:
  Marking -B- faces towards pulley end
- Guided axially via piston

6 Bearing shell

- Note installation position
- Do not interchange used bearing shells
- Check radial clearance with Plastigage:
  New: 0.022...0.063 mm
  Wear limit: 0.091 mm

Protected by copyright. Copying for private or commercial purposes, in part or in whole, is not permitted unless authorised by Volkswagen AG. Volkswagen AG does not guarantee or accept any liability with respect to the correctness of information in this document. Copyright by Volkswagen AG.
sateletronica

Do not rotate crankshaft when checking radial clearance

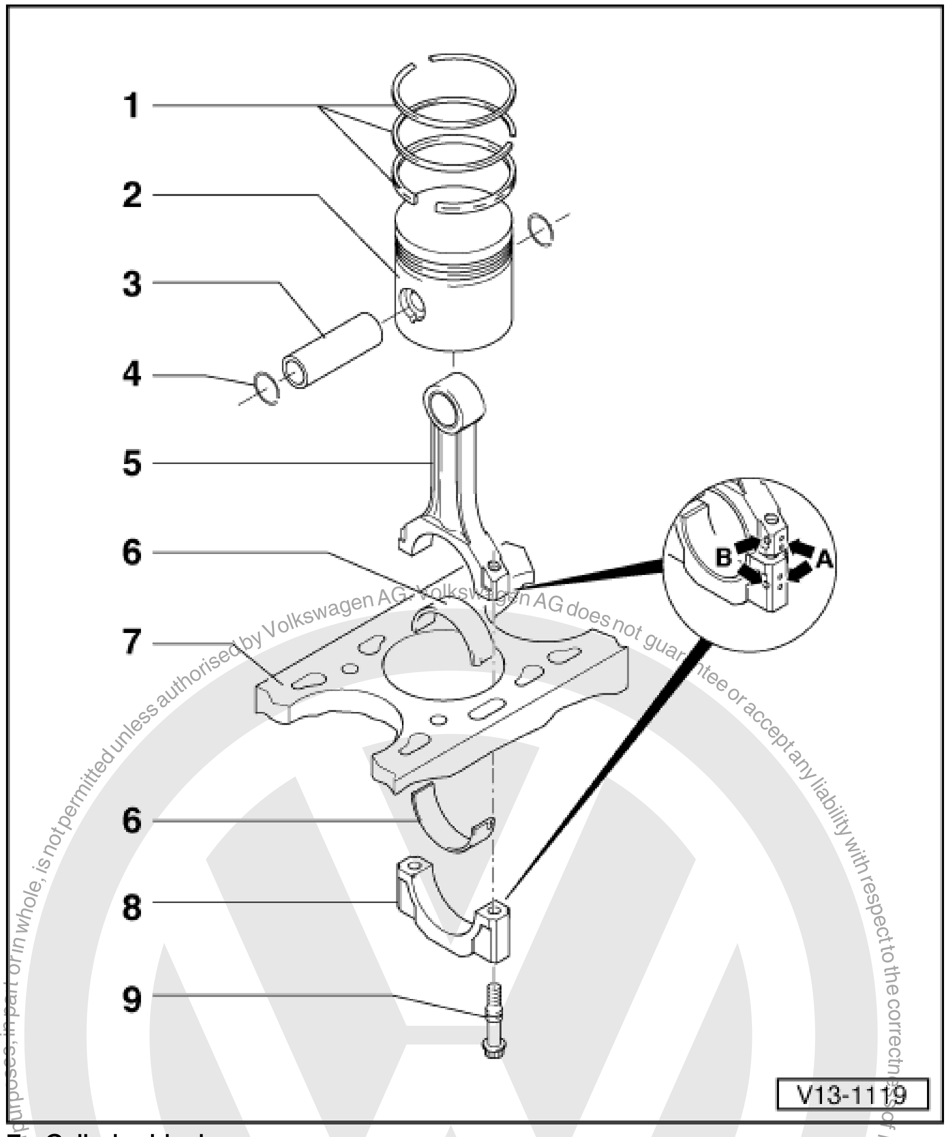

7 Cylinder block
- Checking cylinder bores =>Fig. 4
- Piston and cylinder dimensions =>Page 56

8 Conrod bearing cap
- Note installation position

9 Conrod bolt, 30 Nm + 1/4 turn (90 °) further
- Renew
- Oil threads and contact surface
- To measure radial clearance tighten to 30 Nm but not further

Protected by copyright. Copying for private or commercial purposes, in part or in whole, is not permitted unless authorised by Volkswagen AG. Volkswagen AG does not guarantee or accept any liability with respect to the correctness of information in this document. Copyright by Volkswagen AG.

satelettronica

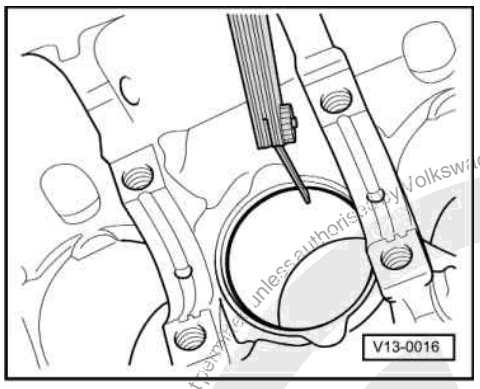

-> Fig. 1 Checking piston ring gap

- Push ring squarely from above down to approx. 15 mm from bottom end of cylinder.

Piston ring Dimensions in mm	New	Wear limit
1. Compression ring	0.20...0.50	1.0
2. Compression ring	0.40...0.70	1.0
Oil scraper ring	0.40...1.40	---1)

1) No wear limit details

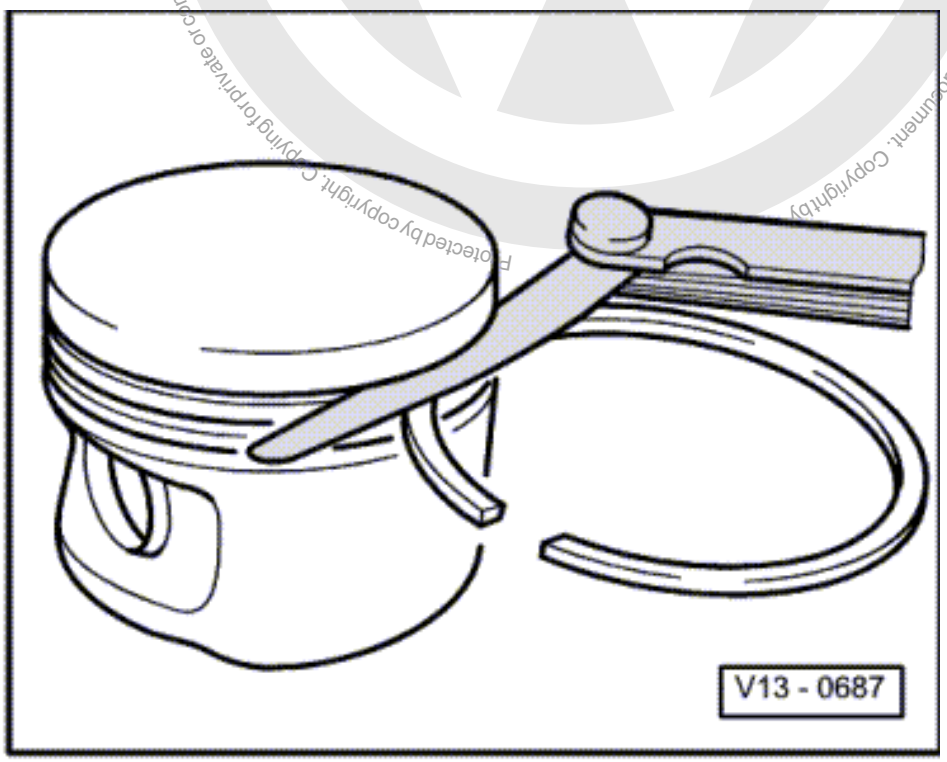

-> Fig. 2 Checking ring to groove clearance

Clean groove before check.

Piston ring Dimensions in mm	New	Wear limit
1. Compression ring	0.04...0.08	0.15

Protected by copyright. Copying for private or commercial purposes, in part or in whole, is not permitted unless authorised by Volkswagen AG. Volkswagen AG does not guarantee or accept any liability with respect to the correctness of information in this document. Copyright by
satelettronica

Piston ring Dimensions in mm	New	Wear limit
2. Compression ring	0.04...0.08	0.15
Oil scraper ring	Cannot be measured	

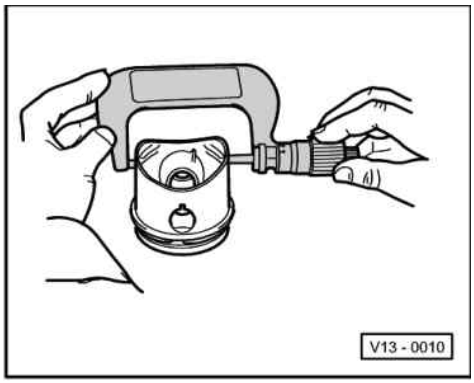

-> Fig. 3 Checking piston

Special tools, testers and auxiliary items

- Micrometer 75...100 mm

- Approx. 10 mm from lower edge and offset 90 ° to piston pin axis. Deviations from nominal dimensions max. 0.04 mm

  Nominal dimension => Page 56 ; Piston and cylinder dimensions

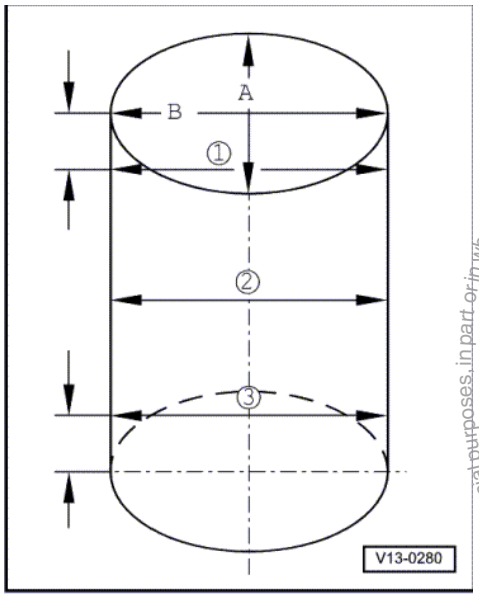

-> Fig. 4 Checking cylinder bores

Special tools, testers and auxiliary items

- Internal dial gauge 50...100 mm

- Take measurements at 3 positions in both lateral -A- and longitudinal -B- directions, as illustrated. Deviation from nominal dimension

Protected by copyright. Copying for private or commercial purposes, in part or in whole, is not permitted unless authorised by Volkswagen AG. Volkswagen AG does not guarantee or accept any liability with respect to the correctness of information in this document. Copyright by Volkswagen AG.
satelettronica

max. 0.08 mm

Nominal dimension => Page 56 ; Piston and cylinder dimensions

Note:

Measuring the cylinder bores must not be done when the cylinder block is mounted on a repair stand with adapter bracket VW 540, as incorrect measurements would then be possible.

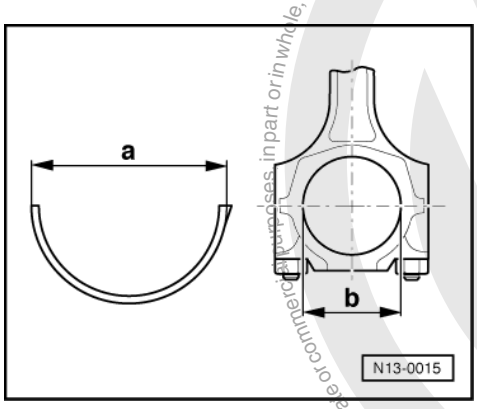

-> Fig. 5 Measuring bearing shell pretension

Special tools, testers and auxiliary items

- Vernier caliper

The bearing shell pretension is calculated as follows:

Bearing shell dimension -a-
- Conrod diameter -b-
= Pretension

Minimum dimension: 1.5 mm

If the pretension is not achieved:

- Renew bearing shells.

3.2 - Piston and cylinder dimensions

Honing dimension		Piston-ø	Cylinder bore-ø
Basic dimen.	mm	76.485	76.51
1st oversize	mm	76.735	76.76
2nd oversize	mm	76.985	77.01
3rd oversize	mm	77.235	77.26

Protected by copyright. Copyright by Volkswagen AG.
Copyright by Volkswagen AG. Volkswagen AG does not guarantee or accept any liability with respect to the correctness of information in this document. Copying for private or commercial purposes, in part or in whole, is not permitted unless authorised by Volkswagen AG.
satelettronica

15 - Cylinder head, Valve gear

1 - Removing and installing cylinder head

1.1 - Removing and installing cylinder head

Checking compressions=> Page 71

Notes:

- When installing an exchange cylinder head, all the contact surfaces between the support elements, roller rocker fingers and the cams must be oiled before installing the camshaft housing.
- The plastic packing pieces for protecting the open valves must not be removed until immediately before fitting cylinder head.
- If the cylinder head is replaced, all the coolant in the system must also be renewed.

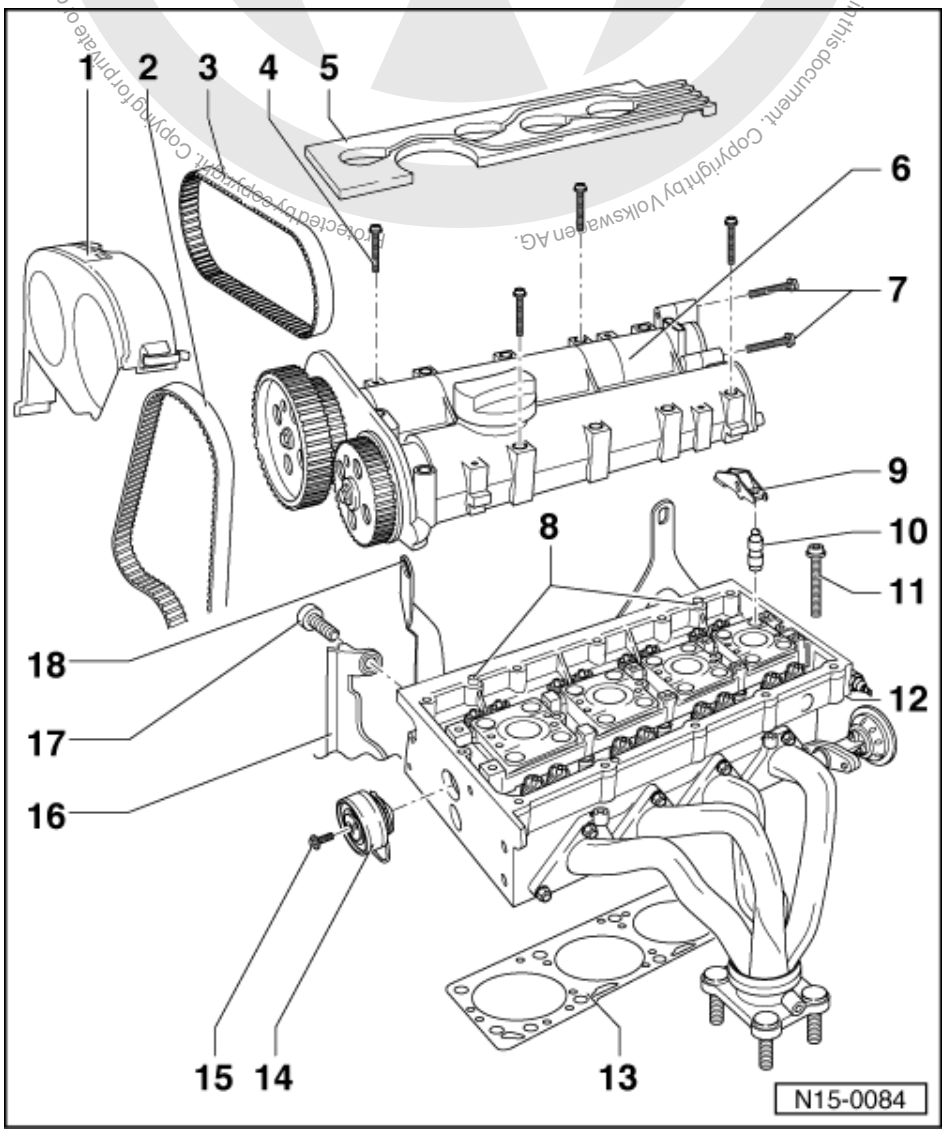

1 Toothed belt guard - upper part
2 Main drive toothed belt
- Check for wear
- Do not kink

satelettronica

- Removing, installingand tensioning
  => Page 25

3 Coupling drive toothed belt
- Check for wear
- Do not kink
- Removing, installing and tensioning
  => Page 25

4 10 Nm + 1/4 turn (90 °) further
- Renew
- Tighten from centre outwards

5 H.T. cable guide

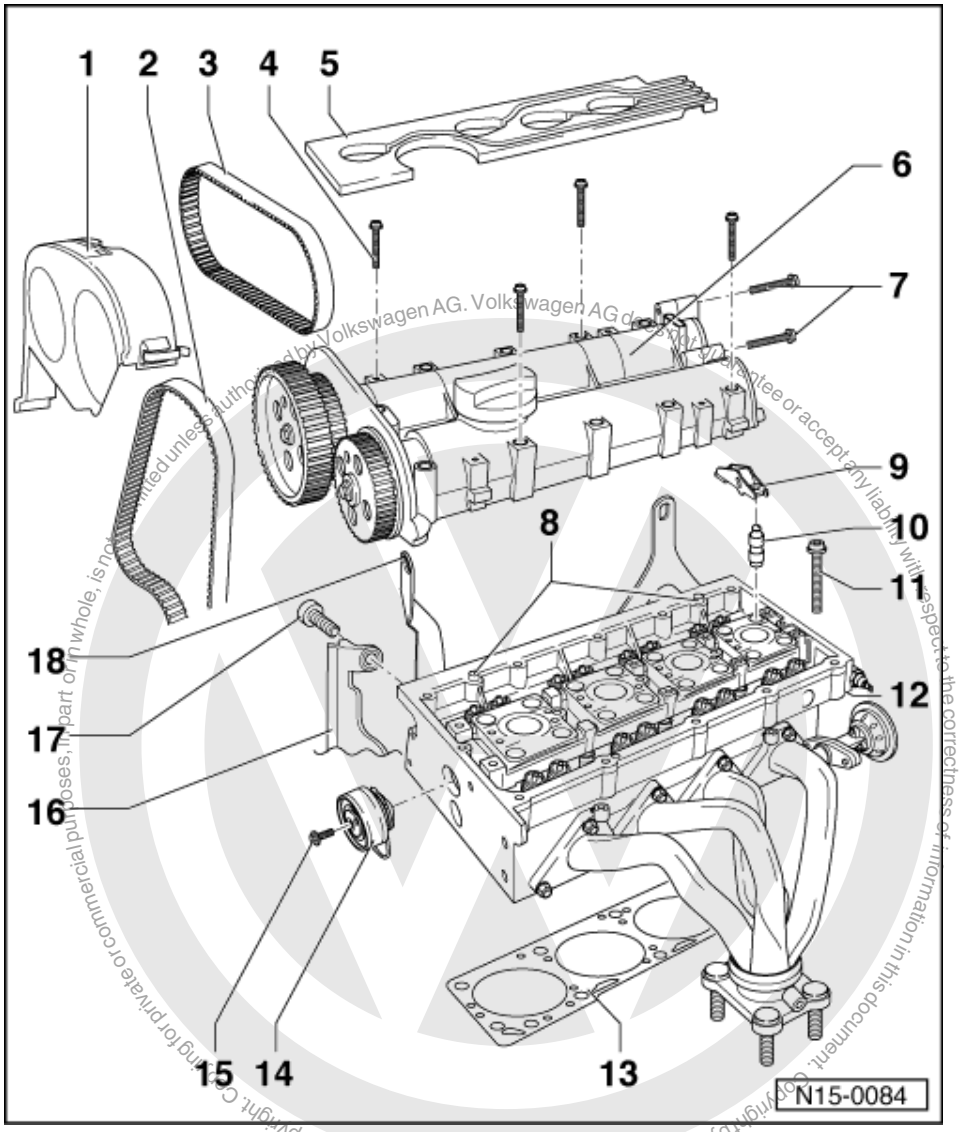

6 Camshaft housing
- Removing and installing
  => Page 62
- Remove remnants of old sealant
- Coat with AMV 188 003 before fitting
- When installing fit vertically from above onto studs and dowel pins

7 10 Nm

8 Fitted pin

9 Roller rocker finger
- Check for ease of movement
- Check bearing for ease of movement
- Oil contact surface

Protected by copyright. Copying for private or commercial purposes, in part or in whole, is not permitted unless authorised by Volkswagen AG. Volkswagen AG does not guarantee or accept any liability with respect to the correctness of information in this document. Copyright by Volkswagen AG.

satelettronica

- Use securing clip to clip onto support element when installing

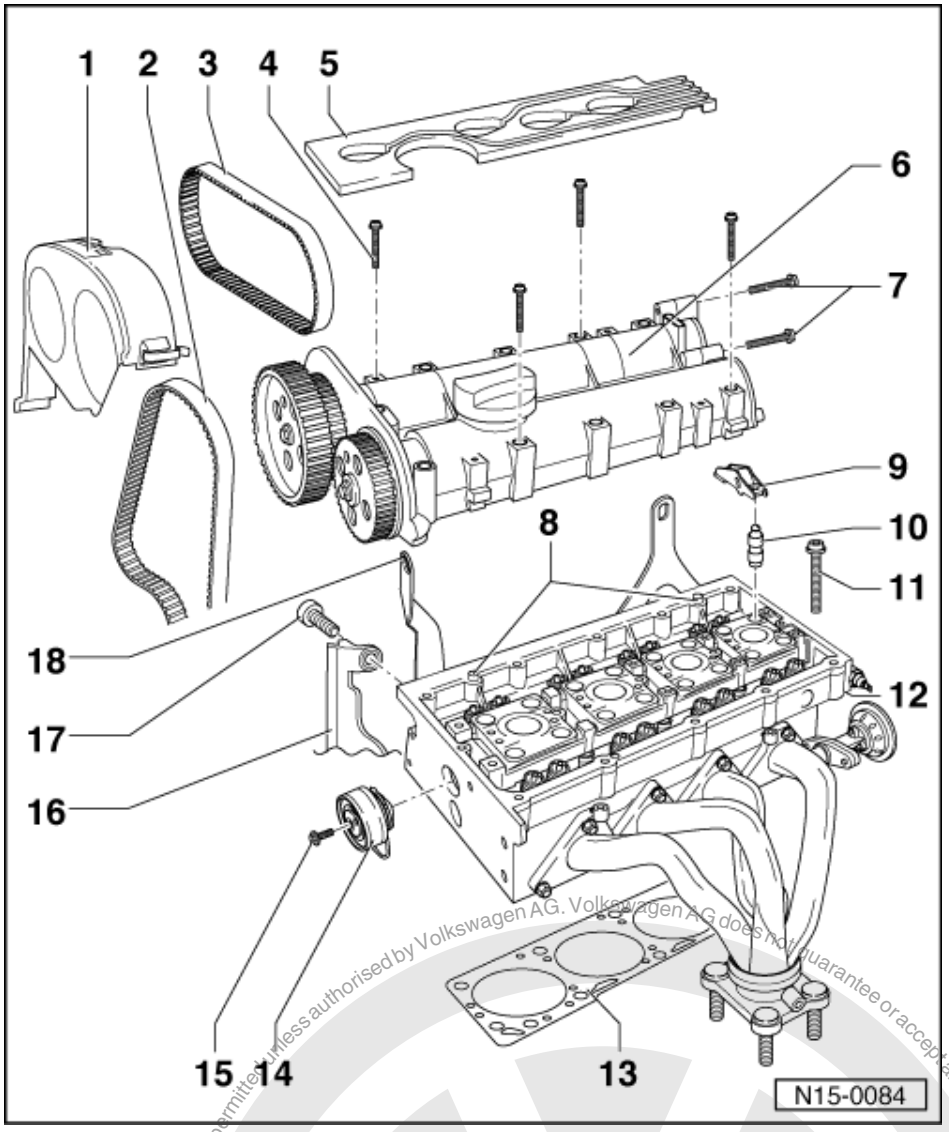

10 Support element
- Do not interchange
- With hydraulic valve clearance compensation
- Before installing check camshaft axial clearance => Page 79 , Fig. 3
- Oil contact surface

11 Cylinder head bolt
- Renew
- Note installation instructions and sequence when loosening and tightening => Page 64

12 Cylinder head
- Removing and installing => Page 64
- Check for distortion => Fig. 1
- After replacing renew the complete coolant

satelettronica
Protected by copyright. Copying for private or commercial purposes, in part or in whole, is not permitted unless authorised by Volkswagen AG. Volkswagen AG does not guarantee or accept any liability with respect to the correctness of information in this document. Copyright by Volkswagen AG.

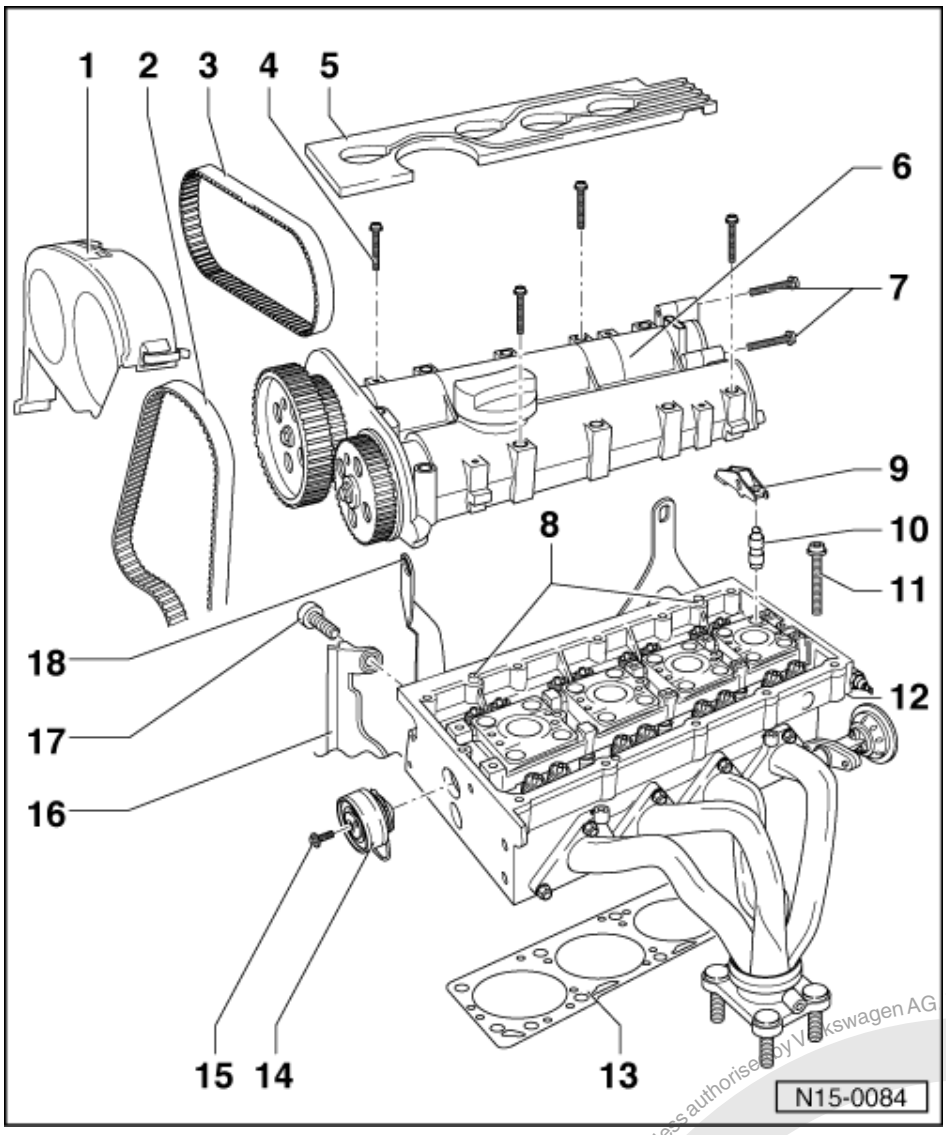

13 Cylinder head gasket
- Renew
- Metal gasket
- After replacing renew the complete coolant

14 Coupling drive tensioning roller
- Checking => Page 32
- Tensioning toothed belts => Page 25

15 20 Nm

16 Rear toothed belt guard

17 20 Nm

18 Lifting eye

satelettronica
Protected by copyright. Copying for private or commercial purposes, in part or in whole, is not permitted unless authorised by Volkswagen AG. Volkswagen AG does not guarantee or accept any liability with respect to the correctness of information in this document. Copyright by Volkswagen AG.

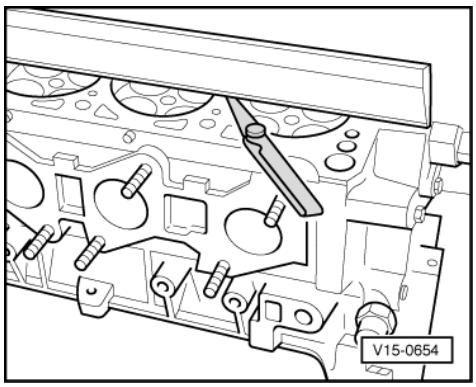

-> Fig. 1 Checking cylinder head for distortion

Max. permissible distortion: 0.05 mm

1.2 - Removing and installing camshaft housing

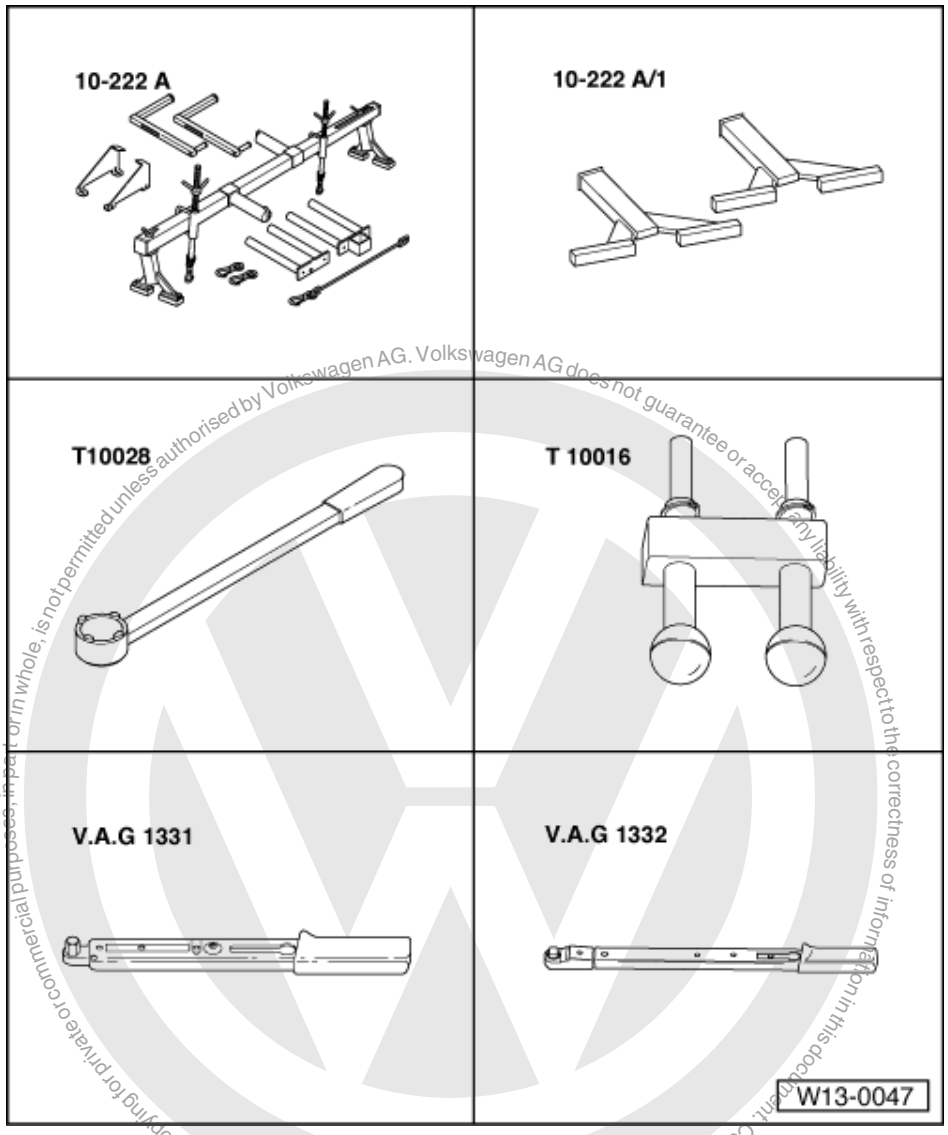

satelettronica
Protected by copyright. Copyright for private or commercial purposes, in part or in whole, is not permitted unless authorised by Volkswagen AG. Volkswagen AG does not guarantee or accept any liability with respect to the correctness of information in this document. Copyright by Volkswagen AG.

Special tools, workshop equipment, test and measuring appliances and auxiliary items required

- 10-222A Support bracket
- 10-222A/1 Support for support bracket
- T 10028 Counter-hold
- T 10016 Camshaft locking device
- V.A.G 1331 Torque wrench (5...50 Nm)
- V.A.G 1332 Torque wrench (40...200 Nm)
- D 188 003 A1 Sealant

Removing

Notes:

- The camshafts are mounted in the camshaft housing on this engine. Therefore the camshaft housing can only be removed after first removing both toothed belts.
- The camshaft housing sealing surface must not be reworked.
- Removing and installing camshaft =>Page 73 , Servicing valve gear.

Work sequence

- First check whether a coded radio is fitted. If this is the case obtain the anti-theft coding.
- With the ignition switched off disconnect the battery earth strap.
- First remove both toothed belts => Page 25 .
- Remove spark plug connectors with H.T. cables.
- Pull 4 pin connector off ignition transformer.
- Pull connector off Hall sender.

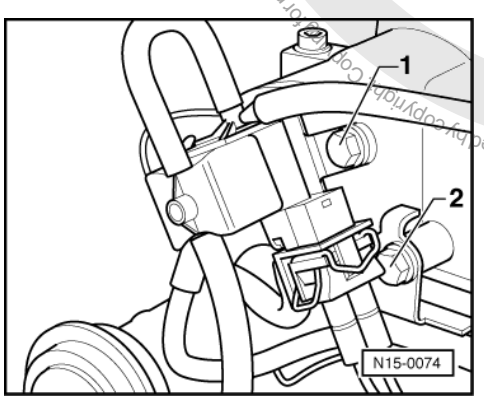

- -> Remove securing bolts from exhaust gas recirculation valve -1- as well as cable retainer -2-.
- Remove toothed belt guard rear securing bolt (in area of right-hand lifting eye).
- Loosen camshaft housing bolts (from outside to inside and in cross-over sequence) and remove.
- Carefully lift camshaft housing off.

Installing

Prerequisites

- The crankshaft toothed belt sprocket is secured to the crankshaft with the securing bolt and two washers.
- The pistons must not be positioned at TDC.
- Camshaft sprockets locked into camshaft housing fitting holes with T 10016 and secured against turning.

Note:

If a piston is at TDC the valves could strike the piston when turning the camshafts.

- Remove sealant remnants on cylinder head and camshaft housing with a commercially available sealant remover.

Protected by copyright. Copyright by Volkswagen AG. Volkswagen AG does not guarantee or accept any liability with respect to the correctness of information in this document. Copyright by Volkswagen AG.
satelettronica

- Prevent dirt and sealant remnants from entering cylinder head.

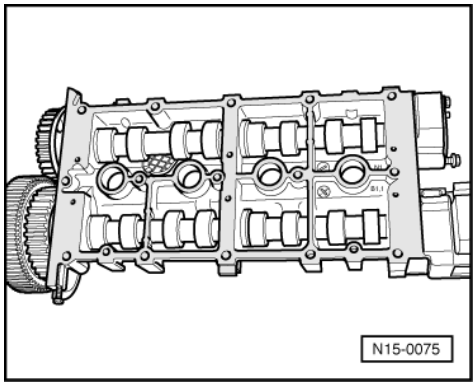

- Clean sealing surface, must be free of oil and grease.
- -> Apply a thin even coat of sealant onto the clean camshaft housing sealing surface. See hatched area on illustration.

Note:

The sealant must not be applied too thick otherwise excess sealant can enter the oil channels and cause damage to the engine.

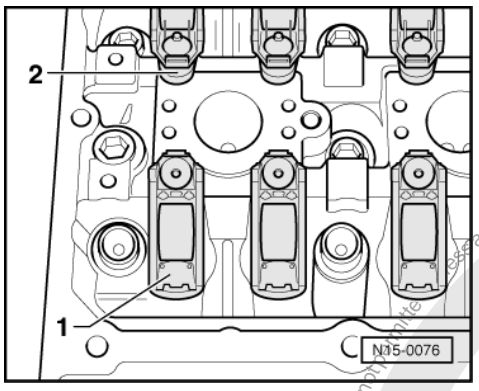

- -> Ensure all roller rocker fingers contact the valve ends -1- correctly and they are clipped into their respective support elements -2-.
- Screw two studs (M6 x 70) into cylinder head before installing camshaft housing.

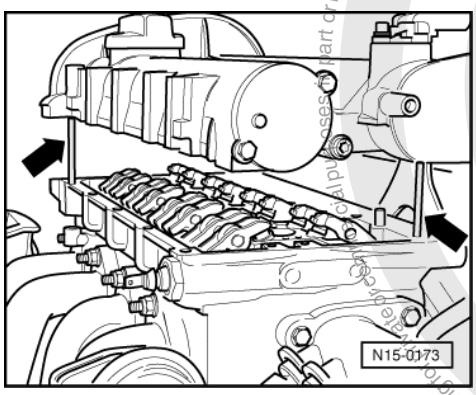

- -> Carefully fit the camshaft housing vertically onto the cylinder head studs and dowel pins -arrows- from above.
- Tighten camshaft housing new securing bolts (evenly from inside to outside using cross-over sequence).

Ensure that camshaft housing is not canted.
Tightening torque: 10 Nm + 1/4 turn (90 °) further.

satelettronica
Protected by copyright. Copying for private or commercial purposes, in part or in whole, is not permitted unless authorised by Volkswagen AG. Volkswagen AG does not guarantee or accept any liability with respect to the correctness of information in this document. Copyright by Volkswagen AG.

Note:

- Sealant must be left dry for approx. 30 minutes after installing camshaft housing.

The rest of the assembly is basically a reverse of the dismantling sequence.

Protected by copyright. Copying for private or commercial purposes, in part or in whole, is not permitted unless authorised by Volkswagen AG. Volkswagen AG does not guarantee or accept any liability with respect to the correctness of information in this document. Copyright by Volkswagen AG.

1.3 - Removing and installing cylinder head

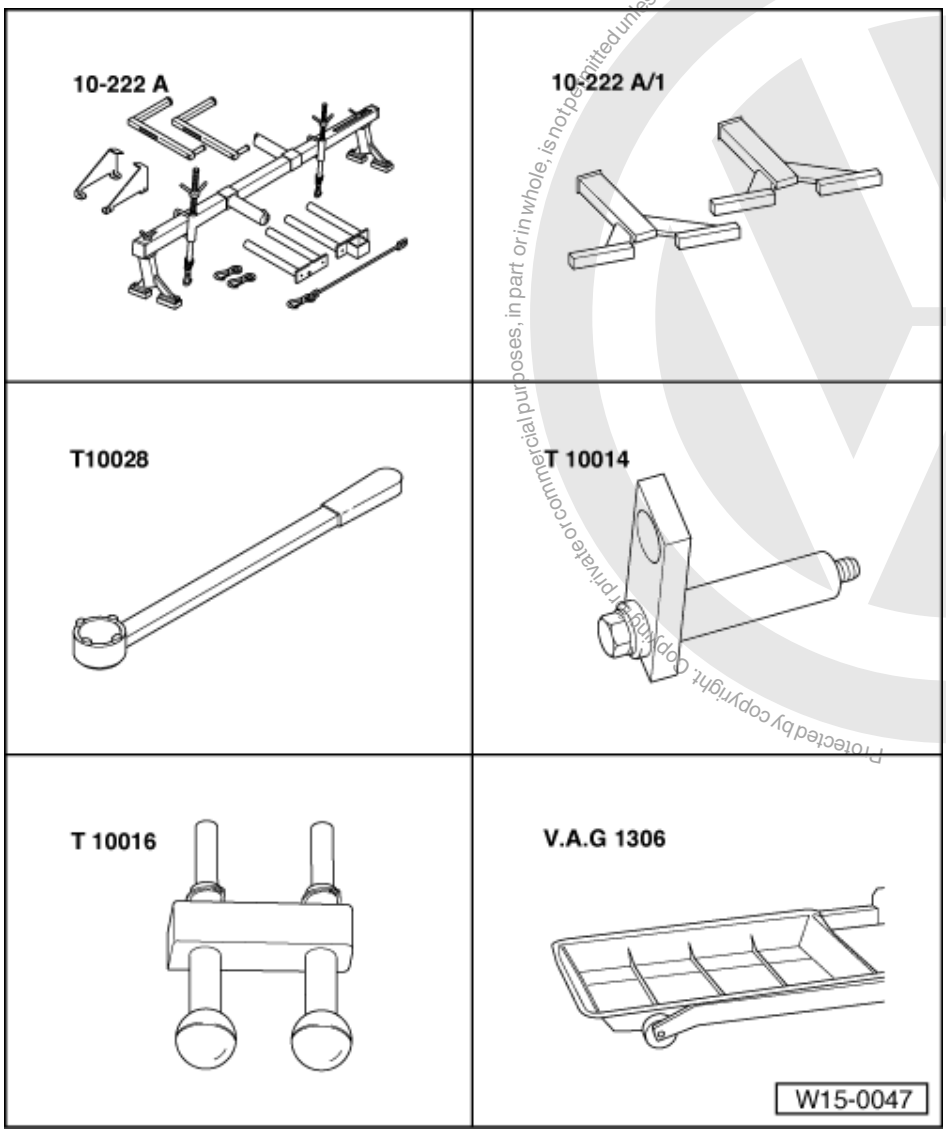

Special tools, workshop equipment, test and measuring appliances and auxiliary items required

- 10-222A Support bracket
- 10-222A/1 Support for support bracket
- T 10028 Counter-hold
- T 10014 Retainer
- T 10016 Camshaft locking device
- V.A.G 1306 Drip tray

satelettronica

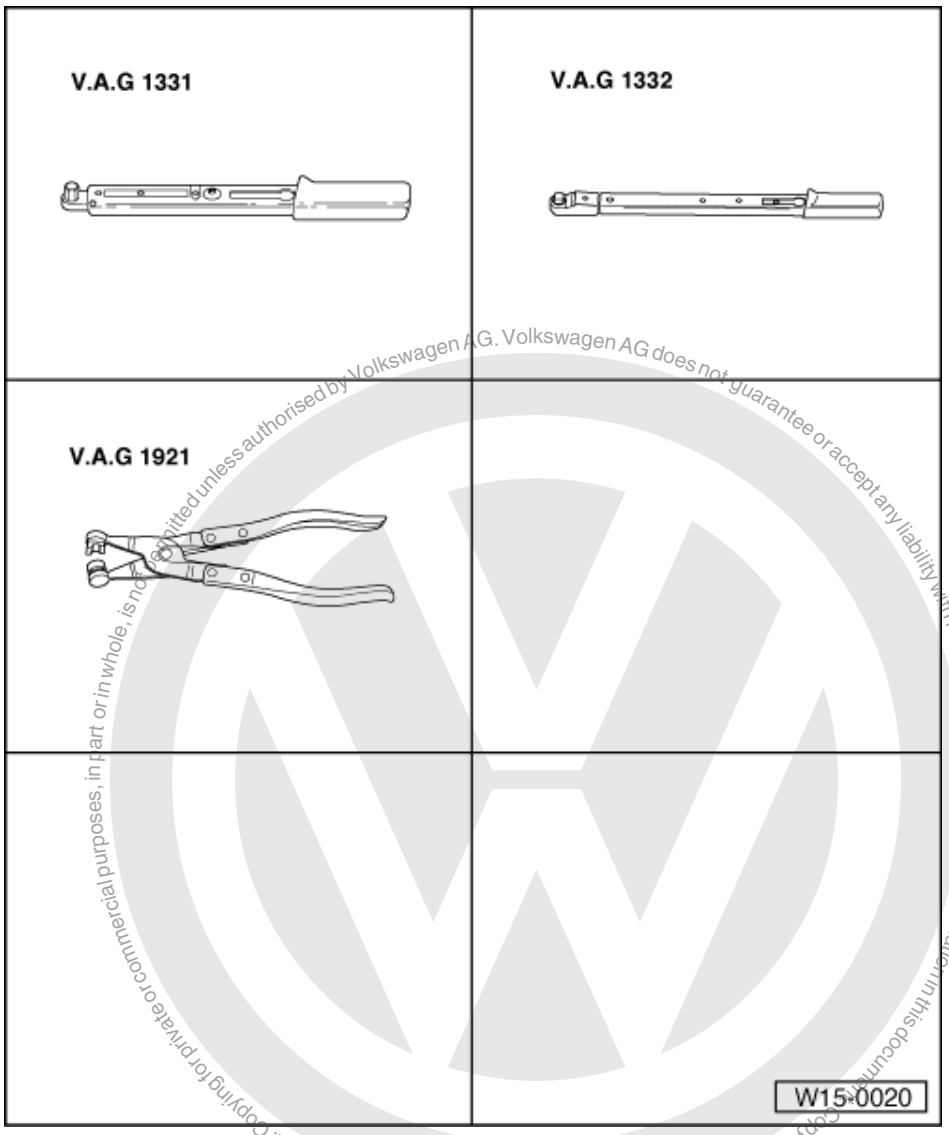

- V.A.G 1331 Torque wrench (5...50 Nm)
- V.A.G 1332 Torque wrench (40...200 Nm)
- V.A.G 1921 Pliers for spring-type clips
- D 188 003 A1 Sealant

Protected by copyright. Copying for private or commercial purposes, in part or in whole, is not permitted unless authorised by Volkswagen AG. Volkswagen AG does not guarantee or accept any liability with respect to the correctness of information in this document. Copyright by Volkswagen AG.

Prerequisites

- The engine must be no more than warm to touch.
- The pistons must not be positioned at TDC.

Removing

- First check whether a coded radio is fitted. If this is the case obtain the anti-theft coding.
- With the ignition switched off disconnect battery earth strap.

satelettronica

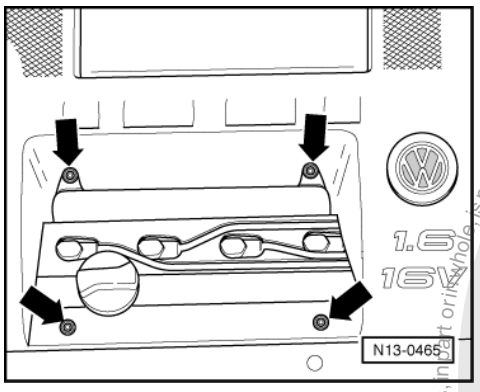

- -> Remove cover above camshaft housing -arrows-.
- Drain coolant => Page 115 .
- Open and close the expansion tank sealing cap to release pressure in cooling system.
- Loosen hose clips and pull coolant hoses off coolant thermostat housing.

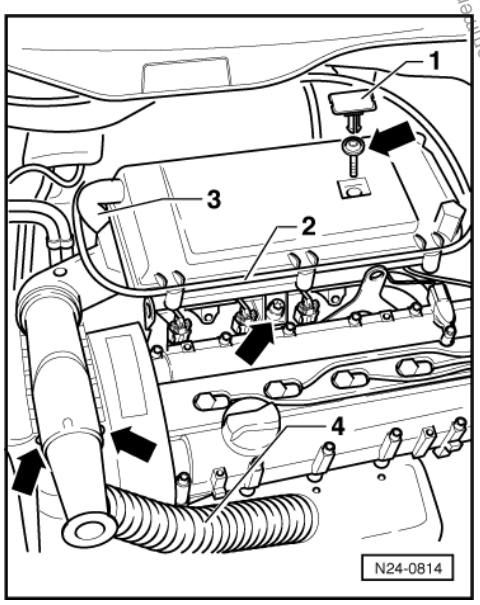

- -> Remove sealing plug -1-.
- Unclip the accelerator cable -2- out of the air cleaner upper part.
- Pull crankcase breather hose -3- off air cleaner upper part.
- Pull warm air intake hose -4- off warm air collecting plate.
- Loosen air cleaner at securing screws marked by arrows.
- Remove air cleaner.

Note:

Self-tapping screws/bolts are used to secure the air cleaner to plastic intake pipe as well as to secure the air cleaner upper part to the air cleaner lower part. When these screws/bolts are loosed or tightened using a power tool the threads in the intake manifold or the air cleaner lower part may be damaged.

For this reason the use of a power tool can only be used when:

- The power tool maximum speed is 200 rpm.
- The tightening torque is set to a maximum of 3 Nm.

- Remove oil dipstick tube.
- Detach the accelerator cable from the support bracket and the throttle valve control part (do not remove locating clip).

Protected by copyright. Copying for private or commercial purposes, in part or in whole, is not permitted unless authorised by Volkswagen AG. Volkswagen AG does not guarantee or accept any liability with respect to the correctness of information in this document. Copyright by Volkswagen AG.
satelettronica

Warning!
Fuel supply lines are under pressure! Before removing from hose connection wrap a cloth around the connection. Then release pressure by carefully pulling hose off connection.

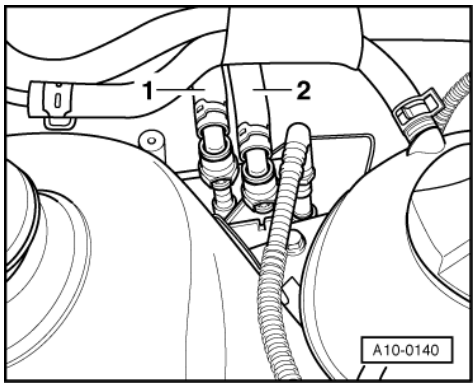

- -> Now separate fuel supply as well as fuel return pipes (press release button).
- Loosen or separate the following components:
  - The hose from crankcase breather
  - The hose from intake manifold to activated charcoal filter system
  - The vacuum hose from inlet manifold to brake servo
  - The vacuum hose from exhaust gas recirculation valve to brake servo vacuum hose junction piece
  - The 2 pin connector from knock sensor (rear of cylinder block) and the 4 pin connector from intake manifold pressure sender (front right under intake manifold).
  - The connector from engine speed sender below oil dipstick tube bracket, and pull connector out from retainer
  - The connector from ignition transformer, from Hall sender and throttle valve control part
  - The connector from coolant temperature sender, oil pressure switch and exhaust gas recirculation valve
  - Injector connectors

Removing camshaft housing

Notes:

- The camshafts are mounted in the camshaft housing on this engine. Therefore the camshaft housing can only be removed after first removing both toothed belts.
- Removing and installing camshaft => 73 , Servicing valve gear.

Work sequence

- First remove both toothed belts
  => Page 25 .
- Remove front exhaust pipe from exhaust manifold.
- Remove spark plug connectors together with H.T. cables.
- Pull 4 pin connector off Hall sender.
- Remove toothed belt guard rear securing bolt (in area of right-hand lifting eye).
- Loosen camshaft housing bolts (from outside to inside and in cross-over sequence) and remove.

Protected by copyright. Copyright by Volkswagen AG. Volkswagen AG does not guarantee or accept any liability with respect to the correctness of information in this document. Copyright by Volkswagen AG. Copying for private or commercial purposes, in part or in whole, is not permitted unless authorised by Volkswagen AG.
satelettronica

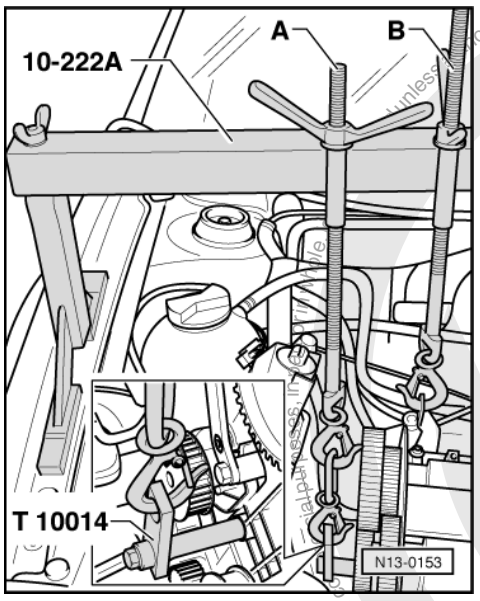

- Carefully lift camshaft housing off.
- Remove roller rocker arm together with support elements and place onto a clean surface. Ensure the roller rocker arms and the support elements are not interchanged.
- -> Now the engine must be lifted again slightly with spindle -B-.

Note:

Both lifting eyes are located on the cylinder head, therefore an additional bracket must be secured to the cylinder block to support the engine.

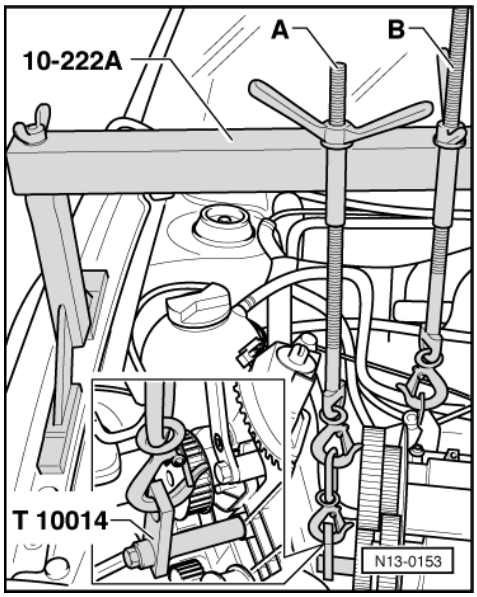

- -> Attach bracket T 10014 to cylinder block using thread hole in vicinity of water pump -as illustrated-.
- Lift engine slightly using second spindle -A- until spindle -B- is relieved.
- Remove spindle -B-.

Removing cylinder head

- Pull the clamps which secure the coolant pipe to coolant pump off the thermostat housing.

satelettronica

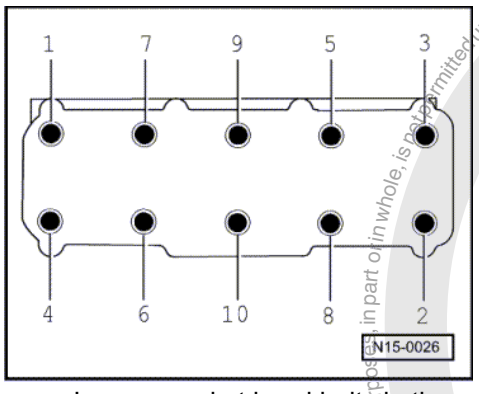

- -> Loosen socket head bolts in the sequence given and then remove completely.
- Carefully lift cylinder head off.

Installing

Notes:

- Only remove the new cylinder head gasket from its packing immediately before installing.
- Handle the new gasket with extreme care. Damaging will lead to leaks.

- Place a clean cloth in cylinders so that no dirt or emery cloth particles can get in between cylinder wall and piston.
- Carefully clean cylinder head and cylinder block sealing surfaces. Thereby ensuring that no scoring or scratches are formed (when using abrasive paper the grade must not be less than 100).
- Carefully remove metal particles, emery remains and cloths.

Installing cylinder head

- Set No. 1 cylinder piston to top dead centre and then turn crankshaft back slightly.
- Camshaft sprockets locked into camshaft housing fitting holes with T 10 016 and secured against turning.
- Fit new cylinder head gasket. Lettering (Part No.) must be readable.
- Place cylinder head on. When doing this observe the centralizing pins in cylinder block.
- Fit new cylinder head bolts and tighten hand tight.

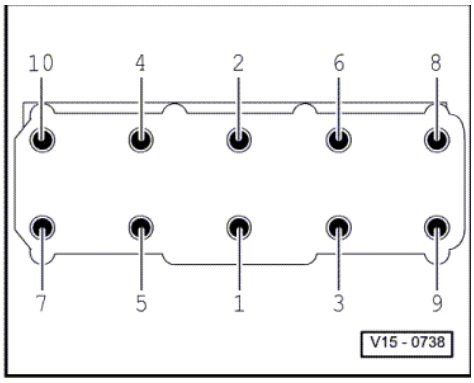

- -> Tighten cylinder head in tightening sequence as follows:
- Tighten all bolts to 30 Nm.
- Then tighten all bolts a 1/4 turn (90 °) further using a rigid wrench.
- Then tighten all bolts again a 1/4 turn (90 °) further.
- Insert support element in cylinder head and fit roller rocker finger onto respective valve stem end and support element.

Installing camshaft housing

Prerequisites

- The crankshaft toothed belt sprocket is secured to the crankshaft with the securing bolt and two washers.
- The pistons must not be positioned at TDC.

Copyright by Volkswagen AG. Volkswagen AG does not guarantee or accept any liability with respect to the correctness of information in this document. Copying for private or commercial purposes, in part or in whole, is not permitted unless authorised by Volkswagen AG.
satelettronica

- Camshaft sprockets locked into camshaft housing fitting holes with T 10016 and secured against turning.

Note:

If a piston is at TDC the valves could strike the piston when turning the camshafts.

- Remove sealant remnants on cylinder head and camshaft housing with a commercially available sealant remover.
- Prevent dirt and sealant remnants from entering cylinder head.

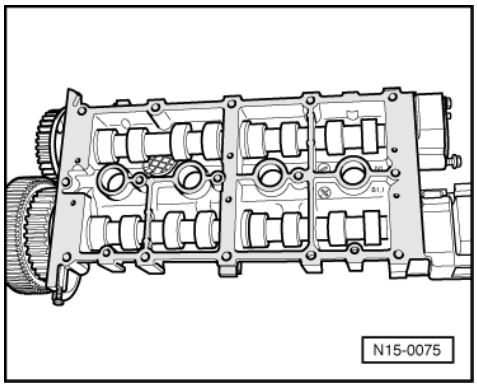

- Clean sealing surface, must be free of oil and grease.
- The camshaft housing sealing surface must not be reworked.
- -> Apply a thin even coat of sealant onto the clean camshaft housing sealing surface. See hatched area on illustration.

Note:

The sealant must not be applied too thick otherwise excess sealant can enter the oil channels and cause damage to the engine.

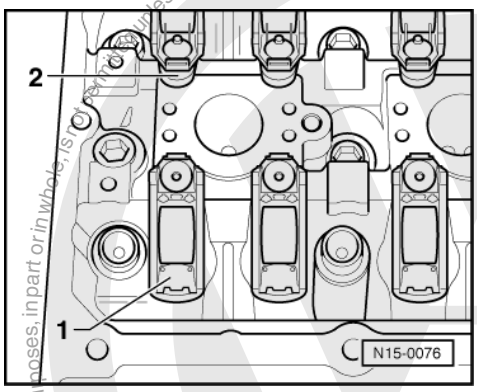

- -> Ensure all roller rocker fingers contact the valve ends -1- correctly and they are clipped into their respective support elements -2-.
- Screw two studs (M6 x 70) into cylinder head before installing camshaft housing.

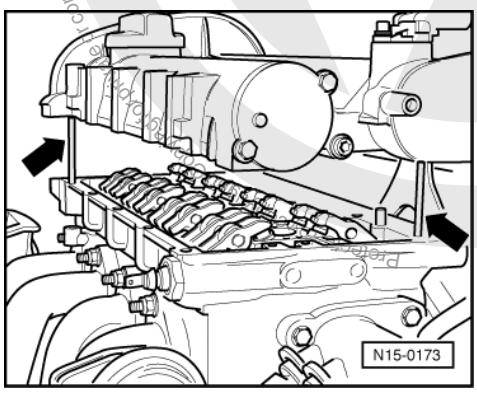

Copyright by Volkswagen AG. Volkswagen AG does not guarantee or accept any liability with respect to the correctness of information in this document.
Protected by copyright. Copying for private or commercial purposes, in part or in whole, is not permitted unless authorised by Volkswagen AG.
satelettronica

- -> Carefully fit the camshaft housing vertically onto the cylinder head dowel pins -arrows- from above.
- Tighten camshaft housing new securing bolts (evenly from inside to outside using cross-over sequence).

Ensure that camshaft housing is not canted.
Tightening torque: 10 Nm + 1/4 turn (90 °) further.

Note:

- Sealant must be left dry for approx. 30 minutes after installing camshaft housing.

The rest of the assembly is basically a reverse of the dismantling sequence.

Filling with new coolant => Page 115 .

1.4 - Checking compression pressures

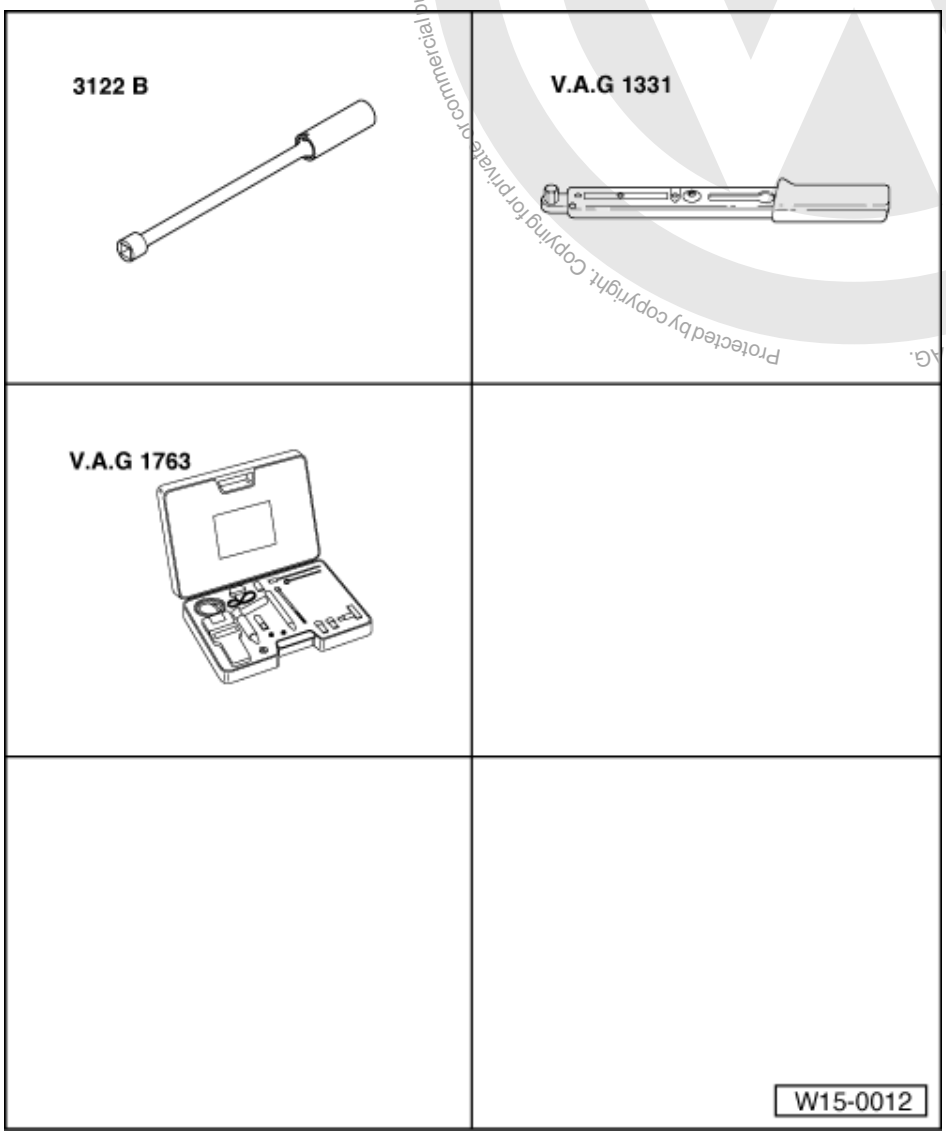

Special tools, workshop equipment, test and measuring appliances and auxiliary items required

- 3122 B Spark plug spanner
- V.A.G 1331 Torque wrench (5...50 Nm)

Protected by copyright. Copying for private or commercial purposes, in part or in whole, is not permitted unless authorised by Volkswagen AG. Volkswagen AG does not guarantee or accept any liability with respect to the correctness of information in this document. Copyright by Volkswagen AG.
satelettronica

- V.A.G 1763 Compression tester

Test conditions

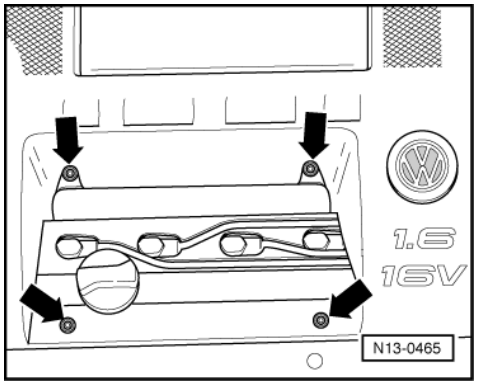

- Engine oil temperature must be at least 30 °C.

Work sequence

- -> Remove cover above camshaft housing -arrows-.
- Take off H.T. wiring with spark plug connectors first.
- Unscrew spark plugs with spark plug spanner 3122B.

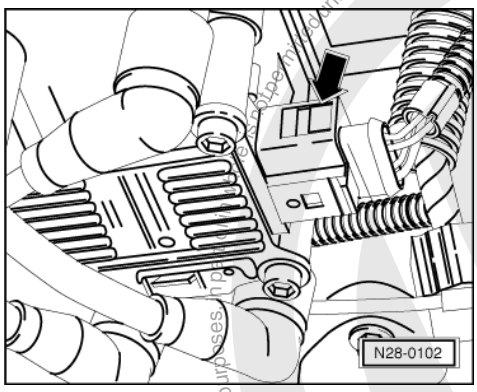

- -> Pull 4 pin connector off ignition transformer -arrow-.
- Use a second mechanic to fully depress accelerator pedal.
- Check compressions with compression tester V.A.G 1381 or V.A.G 1763.

Note:

See relevant test unit operating instructions for instructions on how to use test unit.

- Operate starter until tester shows no further pressure increase.

Compression pressure:

New: 10...15 bar
Wear limit: 7 bar

Permissible difference between all cylinders: 3 bar

Protected by copyright. Copying for private or commercial purposes, in part or in whole, is not permitted unless authorised by Volkswagen AG. Volkswagen AG does not guarantee or accept any liability with respect to the correctness of information in this document. Copyright by Volkswagen AG.
satelettronica

2 - Servicing valve gear

2.1 - Servicing valve gear

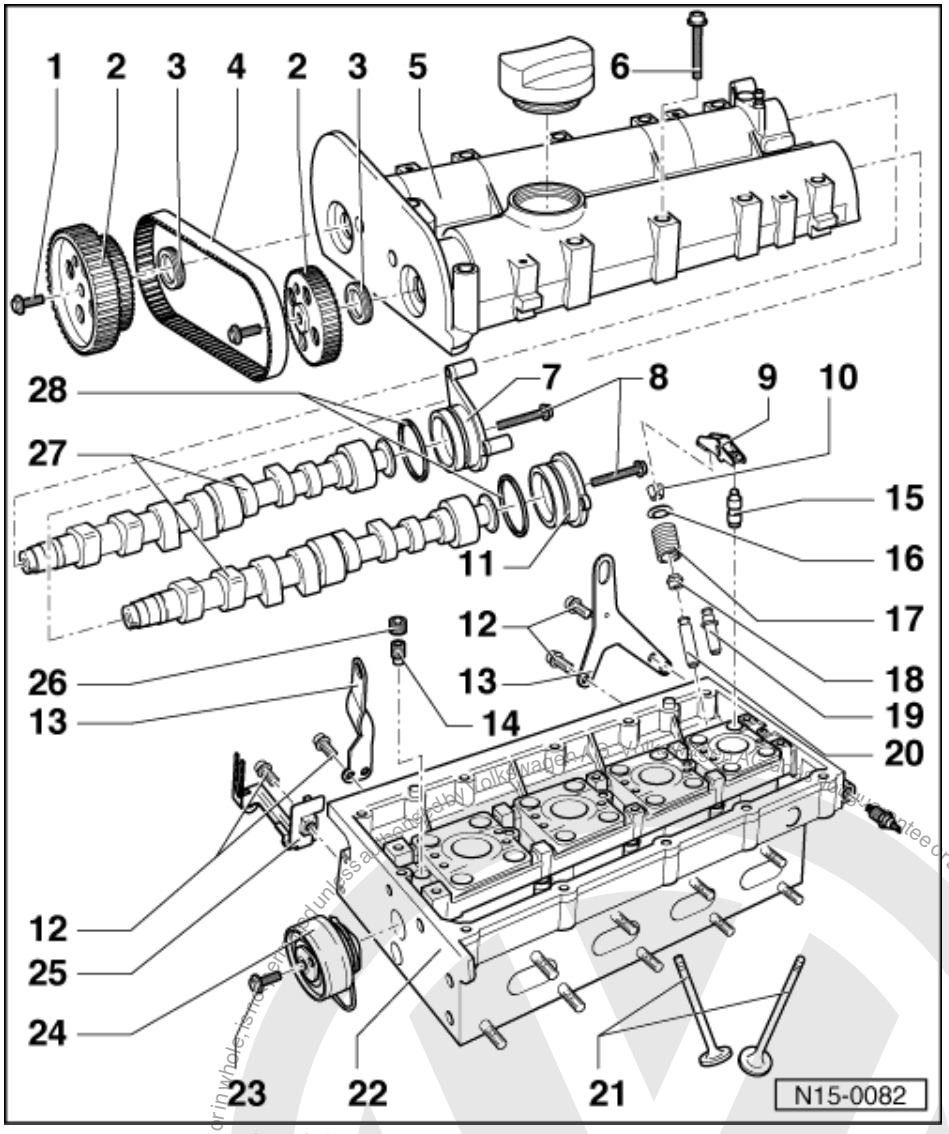

1 20 Nm + 1/4 turn (90 °) further
- Renew
- Use tool T 10016 to loosen and tighten=>Page 79 , Fig. 1

2 Camshaft sprocket
- Note position when installing the toothed belt => Page 25

3 Oil seal
- Lightly oil sealing lip of oil seal
- Renewing=> Page 83

4 Coupling drive toothed belt
- Mark D.O.R. before removing
- Check for wear
- Do not kink
- Removing and installing => Page 25

satelettronica

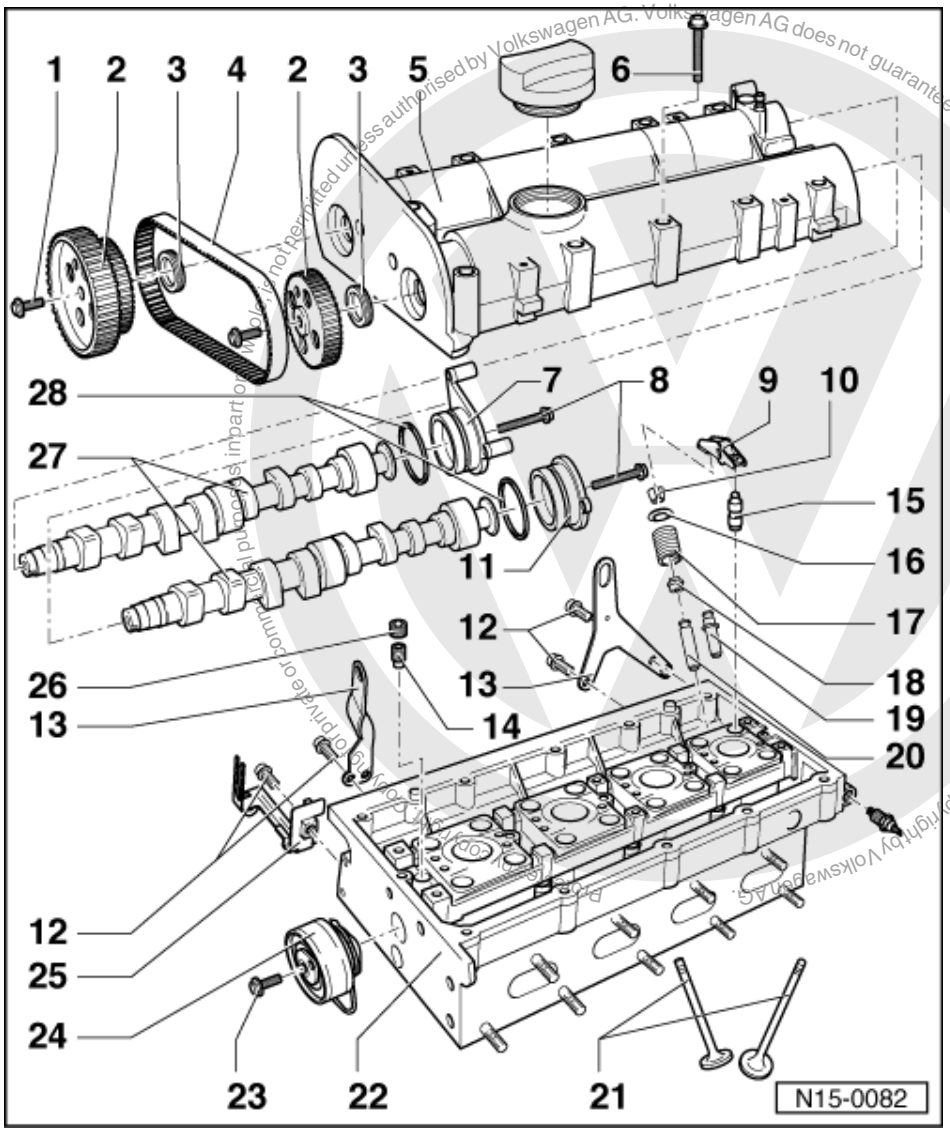

5 Camshaft housing
- Removing and installing
  => Page 62
- Remove sealant remnants
- Coat with AMV 188 003 before fitting
- When installing fit vertically from above onto studs and dowel pins

6 10 Nm + 1/4 turn (90 °) further
- Renew
- Tighten from centre outwards

7 Sealing cap/ignition transformer retainer

8 10 Nm

satelettronica

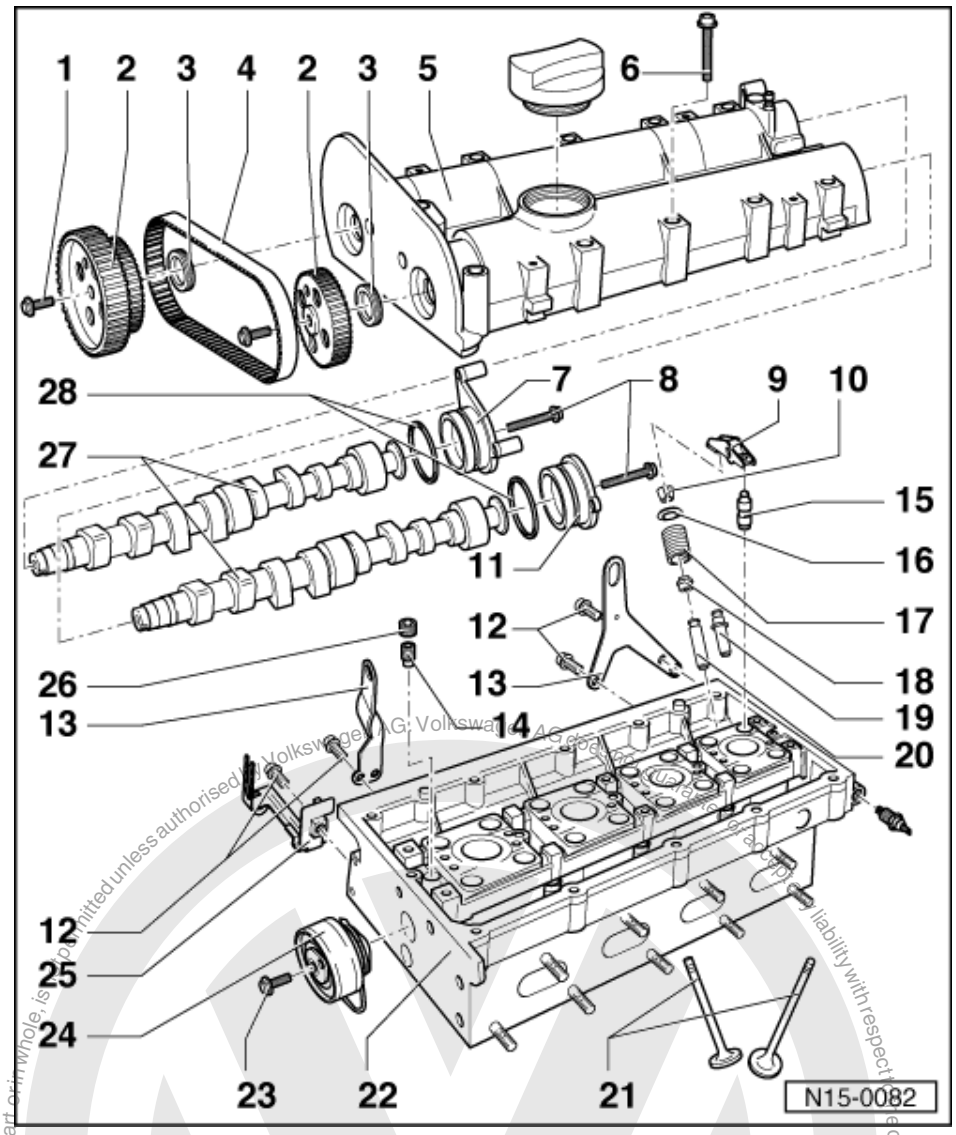

9 Roller rocker finger
- Check roller bearing
- Oil contact surface
- Use securing clip to clip onto support element when installing

10 Cotters

11 Cap

12 20 Nm

13 Lifting eye

14 Non-return valve, 6 Nm
- Insert with D 154 102 A1
- Do not overtighten, otherwise the valve can stick

15 Support element
- Do not interchange
- With hydraulic valve clearance compensation
- Before installing check camshaft axial clearance => Page 79 , Fig. 3
- Oil contact surface

satelettronica

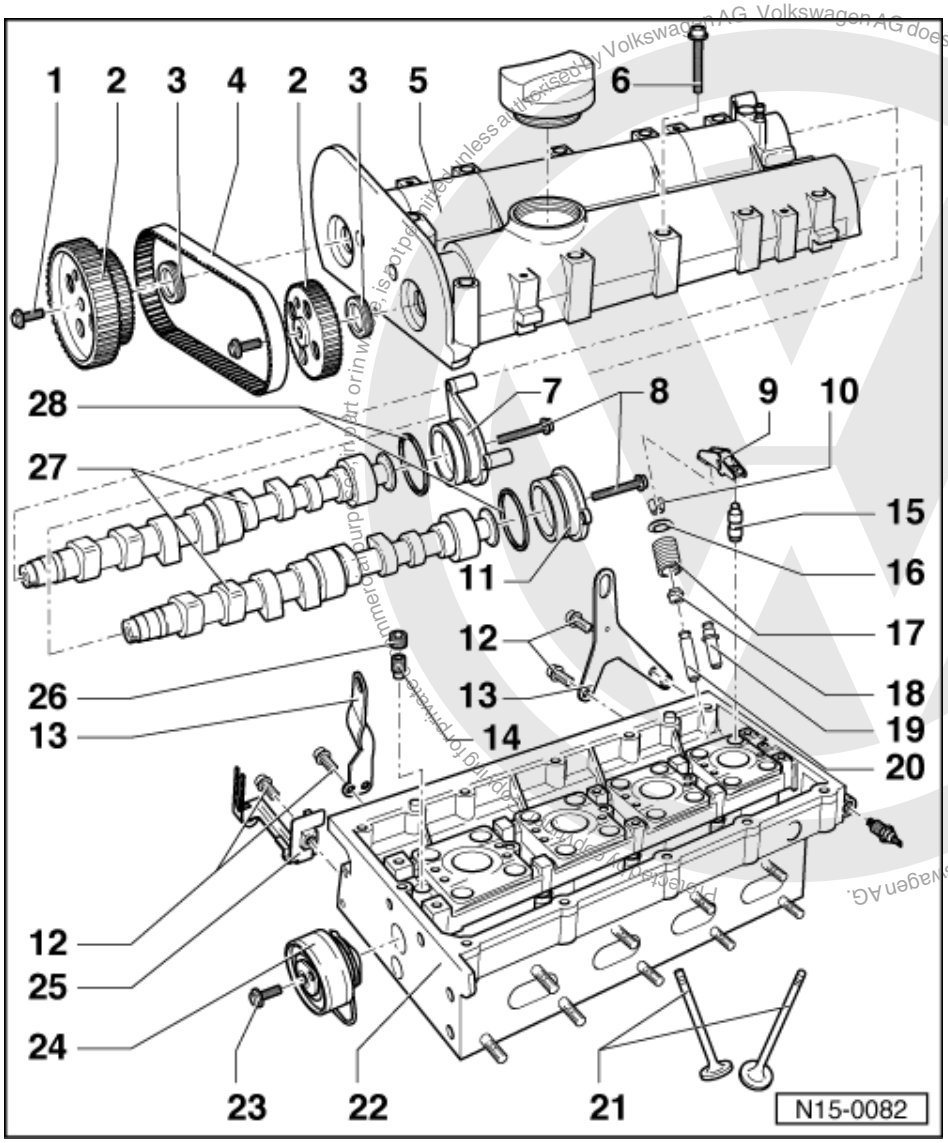

16 Upper valve spring plate

17 Valve spring

- Removing and installing:
  Cylinder head
  removed: with 3362
  installed: => Page 88 , Renewing valve stem seals

18 Valve stem seal

- Renewing=> Page 88

19 Service part - valve guide

- With collar

20 Valve guide

- Checking => Page 85
- Renewing => Page 85

21 Valves

- Do not rework only grinding-in is permitted
- Valve dimensions => Fig. 5

satelettronica

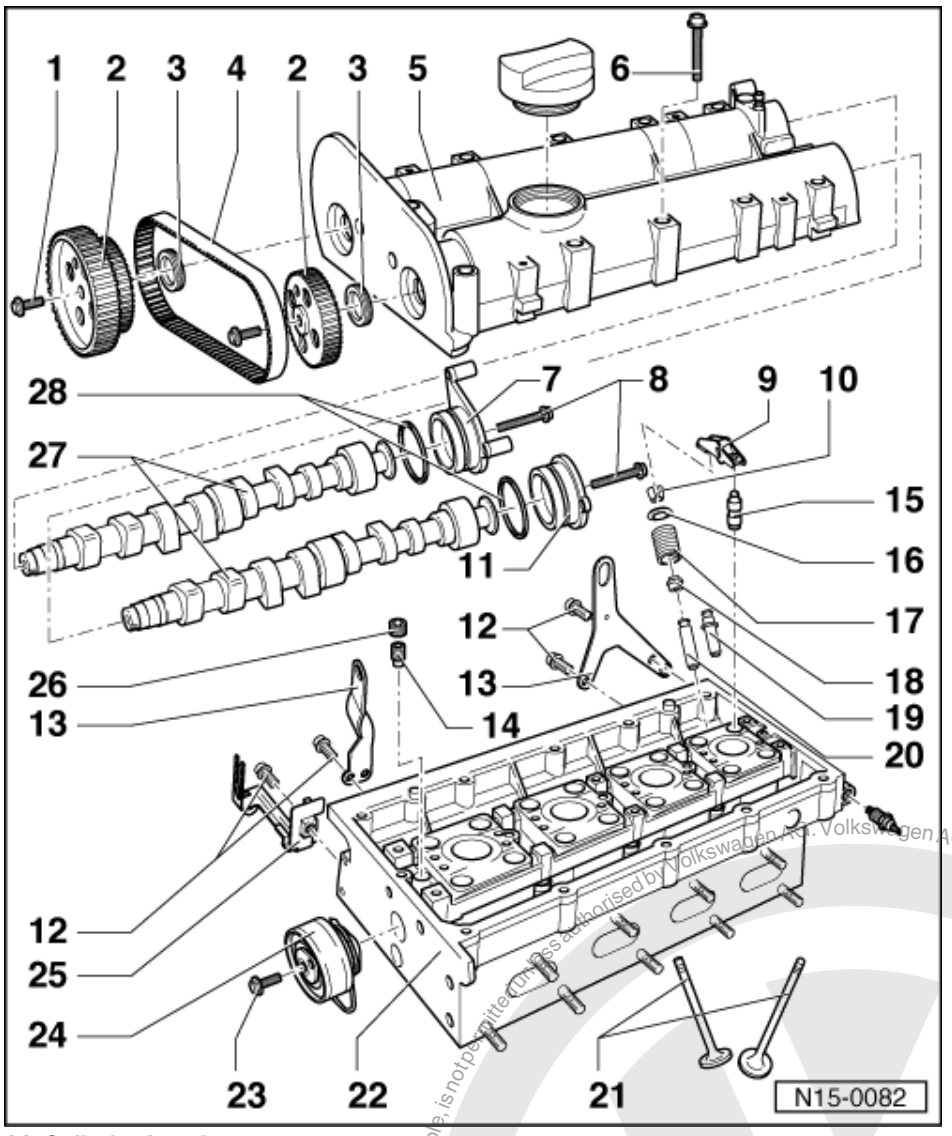

22 Cylinder head

- Reworking valve seats => Page 81
- Reworking sealing surface => Fig. 2

23 20 Nm

24 Tensioner

- Checking => Page 32
- Tensioning toothed belts => Page 25

25 Retainer

26 Sealing plug, 45 Nm

- Insert with D 154 102 A1
- Must not be screwed in too far
- Maximum permitted insertion depth from top of plug to camshaft housing surface = 2 mm

Protected by copyright. Copyright by Volkswagen AG.
Volkswagen AG does not guarantee or accept any liability with respect to the correctness of information in this document.
Copyright by Volkswagen AG. Volkswagen AG does not guarantee or accept any liability with respect to the correctness of information in this document. Copyright by Volkswagen AG. Volkswagen AG does not guarantee or accept any liability with respect to the correctness of information in this document. Copyright by Volkswagen AG. Volkswagen AG does not guarantee or accept any liability with respect to the correctness of information in this document. Copyright by Volkswagen AG. Volkswagen AG does not guarantee or accept any liability with respect to the correctness of information in this document. Copyright by Volkswagen AG. Volkswagen AG does not guarantee or accept any liability with respect to the correctness of information in this document. Copyright by Volkswagen AG. Volkswagen AG does not guarantee or accept any liability with respect to the correctness of information in this document. Copyright by Volkswagen AG. Volkswagen AG does not guarantee or accept any liability with respect to the correctness of information in this document. Copyright by Volkswagen AG. Volkswagen AG does not guarantee or accept any liability with respect to the correctness of information in this document. Copyright by Volkswagen AG. Volkswagen AG does not guarantee or accept any liability with respect to the correctness of information in this document. Copyright by Volkswagen AG.
Protected by copyright. Copyright for private or commercial purposes, in part or in whole, is not permitted unless authorised by Volkswagen AG.
satelettronica

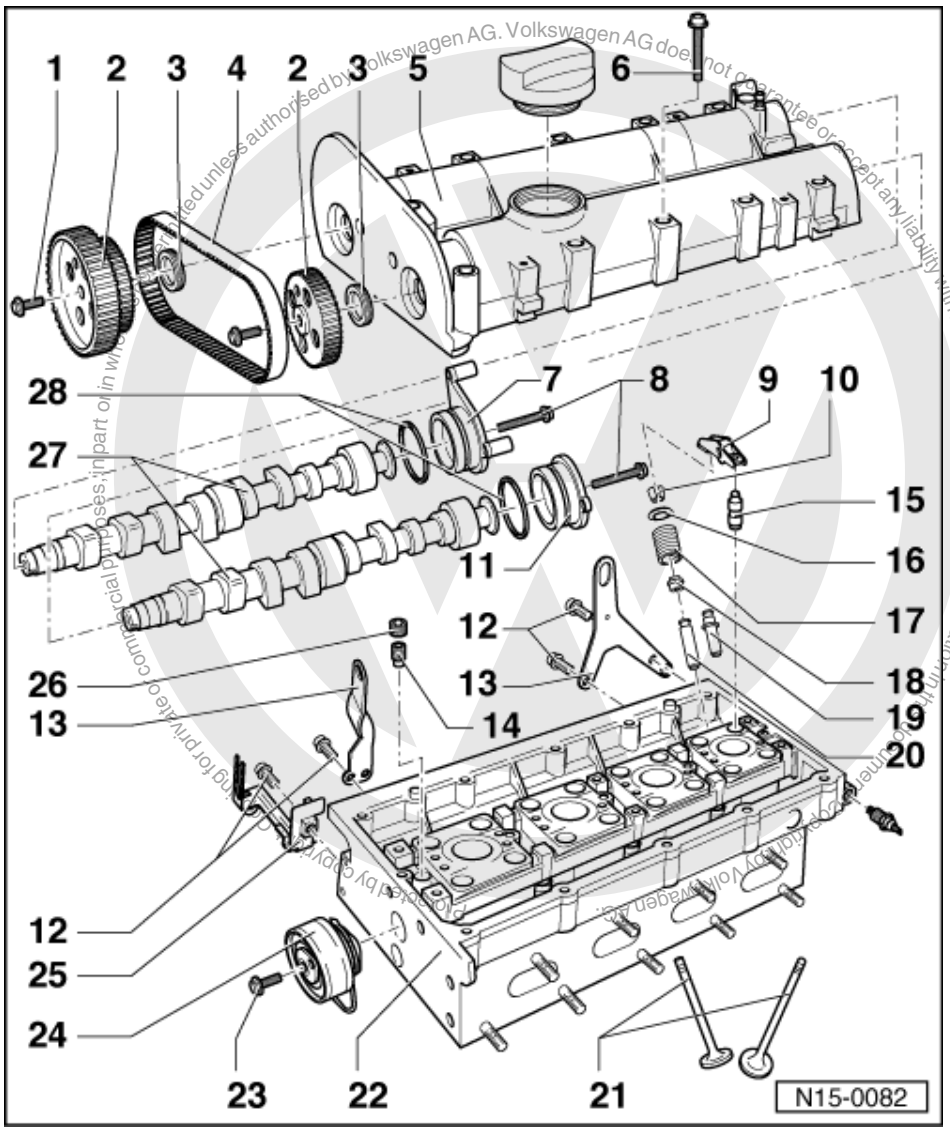

27 Camshafts

- Checking axial clearance => Fig. 3
- Identification and valve timing
  => Page 80 , Fig. 4

28 O-ring

- Renew
- Coat with oil before inserting

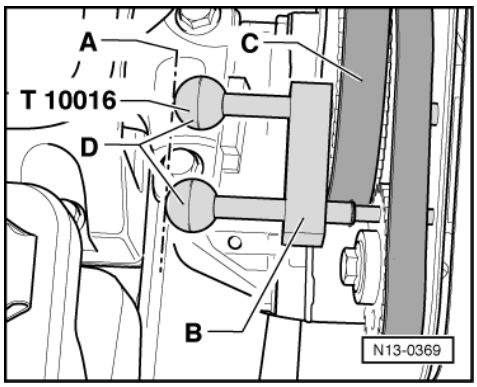

satelettronica

Protected by copyright. Copying for private or commercial purposes, in part or in whole, is not permitted unless authorised by Volkswagen AG. Volkswagen AG does not guarantee or accept any liability with respect to the correctness of information in this document. Copyright by Volkswagen AG.

-> Fig. 1 Locking both camshaft sprockets with camshaft locking tool T 10016

- Guide both locking pins through camshaft sprocket locking pin holes onto stop in camshaft housing fitting holes.

Note:

Both locking pins are inserted correctly when the ends -D- align with line -A-.

- Slide retainer -B- onto stop on inlet camshaft sprocket -C-.
- When both camshaft sprockets are locked in the fitting holes the camshaft pulleys can be loosened or tightened.

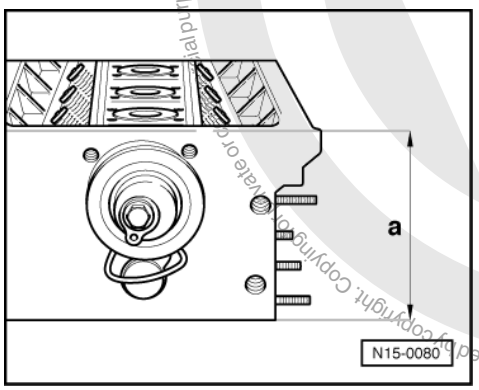

-> Fig. 2 Reworking cylinder head sealing surface

Cylinder head reworking dimension:
a = At least 108.25 mm

Note:

When the sealing surface has been reworked, the valves must be set deeper by the same amount (rework valve seat inserts), otherwise valves will contact pistons. Ensure when doing this that the permissible minimum dimension is maintained => Page 81 .

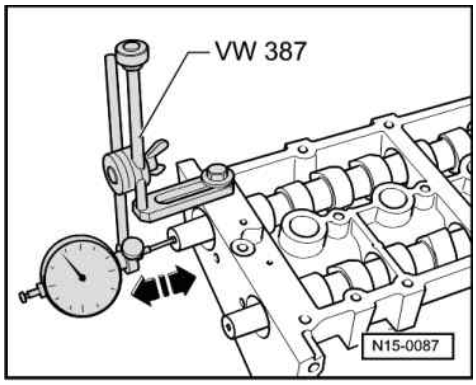

-> Fig. 3 Checking camshaft axial clearance

Special tools, workshop equipment, testers, measuring instruments and auxiliary items required

- VW 387 Universal dial gauge bracket
- Dial gauge

satelettronica

Perform measurements with camshaft housing removed and sealing cover fitted.

Wear limit: max. 0.40 mm

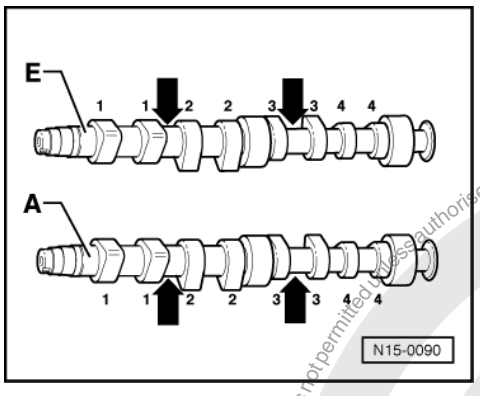

-> Fig.4 Camshaft identification, valve timing

Identification

Identification between cam pairs		
	Cyl. 1 + 2	Cyl. 3
Inlet shaft -E-	"036AF"	"W2"
Exhaust shaft -A-	"036AG"	"W5"

Valve timing at 1 mm valve lift

Inlet opens after TDC	19.1 °
Inlet closes after BDC	15.1 °
Exhaust opens before BDC	20.2 °
Exhaust closes before TDC	15.3 °

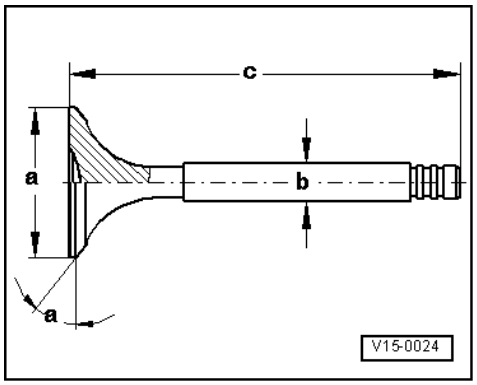

-> Fig. 5 Valve dimensions

Note:

Valves must not be reworked. Only lapping-in is permitted.

Dimension	Inlet valve	Exhaust valve
øa mm	29.5	26.0

Protected by copyright. Copying for private or commercial purposes, in part or in whole, is not permitted unless authorised by Volkswagen AG. Volkswagen AG does not guarantee or accept any liability with respect to the correctness of information in this document. Copyright by Volkswagen AG.
satelettronica

øb	mm	5.973	5.953
c	mm	100.9	100.5
α	<°	45	45

2.2 - Reworking valve seats

Special tools, workshop equipment, testers, measuring instruments and auxiliary items required

- Depth gauge
- Valve seat refacing tool

Notes:

- When repairing engines with leaking valves, it is not sufficient to replace or renew valve seats and valves. It is also necessary to check the valve guides for wear. This particularly important on high mileage engines => Page 85 .
- The valve seats should only be reworked just enough to produce a perfect seating pattern. The maximum permissible reworking dimension must be calculated before work is carried out. If the reworking dimension is exceeded, the function of the hydraulic tappets can no longer be guaranteed and therefore the cylinder head should be renewed.

The max. permissible reworking dimension is calculated as follows:

- Insert valve and press firmly against seat.

Note:

If the valve is to be renewed as part of a repair, use a new valve for the calculation.

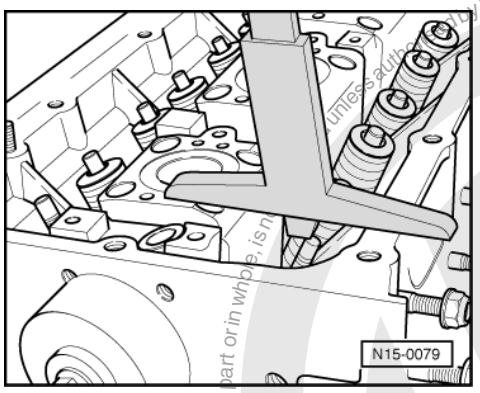

- -> Measure distance between end of valve stem and upper edge of cylinder head.
- Calculate max. permissible reworking dimension from measured distance and minimum dimension.

Minimum dimension:
Inlet valve 7.6 mm
Exhaust valve 7.6 mm

Measured distance minus minimum dimension
= max. permissible reworking dimension.

Example:

-	Measured distance	8.0	mm
	Minimum dimension	7.6	mm
=	max. perm. rework dimension*	0.4	mm

satelettronica
Protected by copyright. Copying for private or commercial purposes, in part or in whole, is not permitted unless authorised by Volkswagen AG. Volkswagen AG does not guarantee or accept any liability with respect to the correctness of information in this document. Copyright by Volkswagen AG.

*) The max. permissible reworking dimension is shown on illustrations for reworking valve seats as dimension "b".

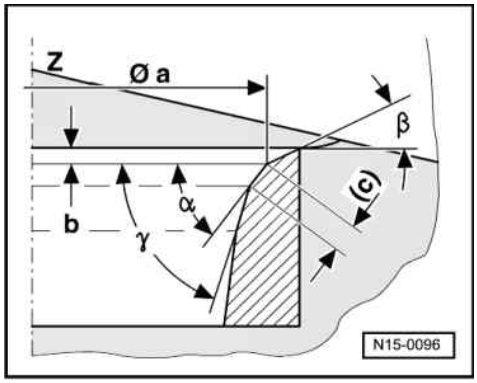

-> Reworking inlet valve seat

a = 28.7 mm ø
b = Max. permissible reworking dimension*
c = 1.5...1.8 mm
Z = Cylinder head lower edge
α = 45 °valve seat angle
β = 30 °upper correction angle
γ = 60 °lower correction angle

Reworking exhaust valve seat

a = ø25.0 mm
b = Max. permissible reworking dimension*
c = approx. 1.8 mm
Z = Cylinder head lower edge
α = 45 °valve seat angle
β = 30 °upper correction angle
γ = 60 °lower correction angle

*) Calculating max. permissible reworking dimension => Page 81 .

Protected by copyright. Copying for private or commercial purposes, in part or in whole, is not permitted unless authorised by Volkswagen AG. Volkswagen AG does not guarantee or accept any liability with respect to the correctness of information in this document. Copyright by Volkswagen AG.
satelettronica

2.3 - Renewing camshaft oil seals

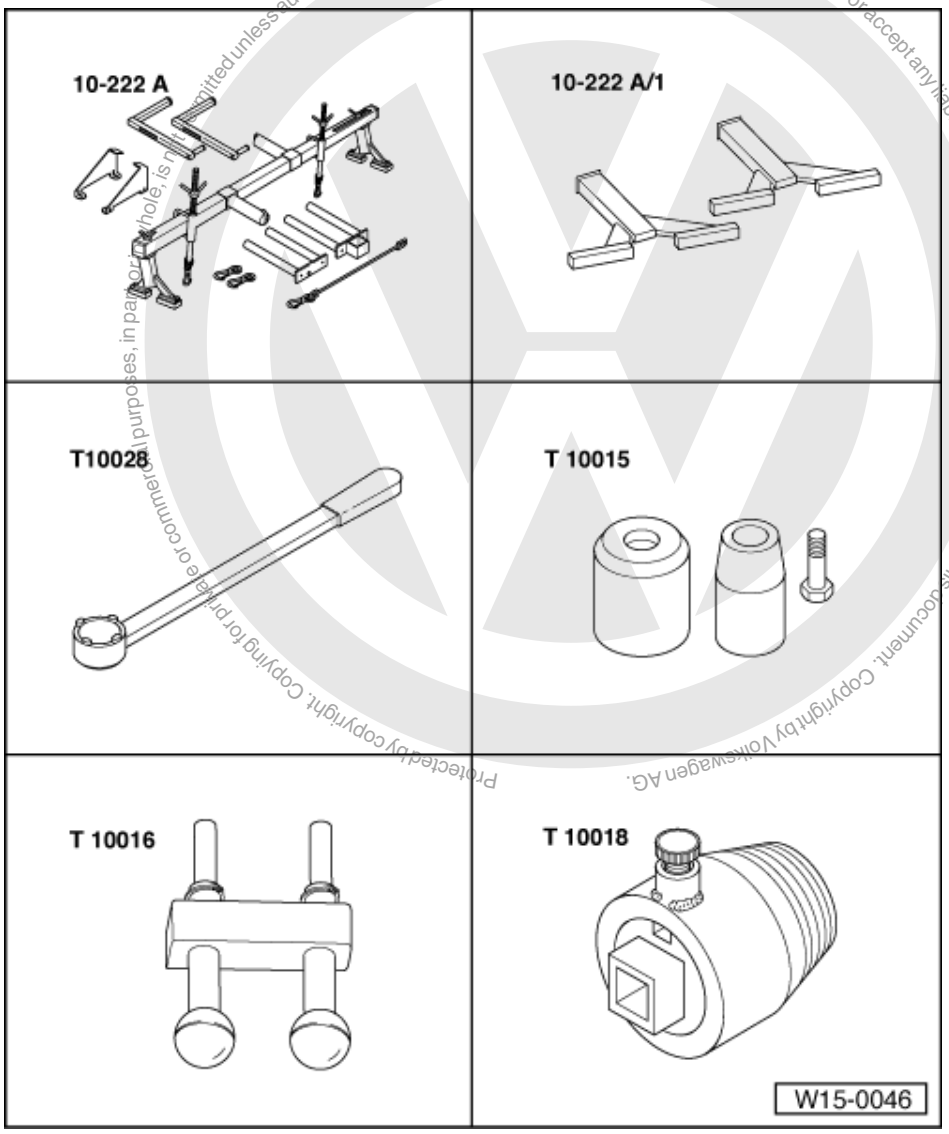

Special tools, workshop equipment, test and measuring appliances and auxiliary items required

- 10-222A Support bracket
- 10-222A/1 Support for support bracket
- T 10028 Counter-hold
- T 10015 Puller
- T 10016 Camshaft locking device
- T 10018 Seal extractor

satelettronica

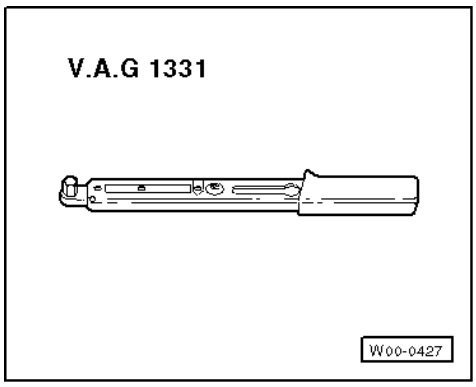

- V.A.G 1331 Torque wrench (5...50 Nm)

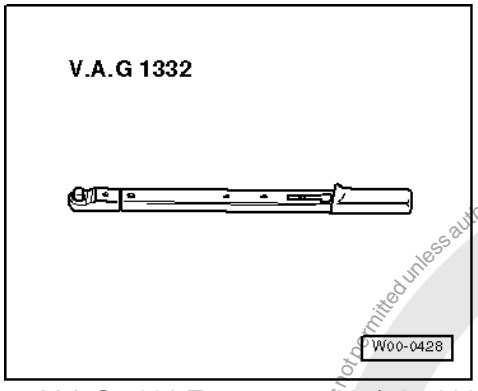

- V.A.G 1332 Torque wrench (40...200 Nm)

Removing

- First remove both toothed belts => Page 25 .
- Turn crankshaft back slightly.

Note:

The camshaft sprockets must be locked into the camshaft housing fitting holes by bolt pins of locking device T 10016.

- Remove camshaft sprockets. Hold camshaft sprockets with locking device T 100 16 to loosen bolts.
- Unscrew inner part of oil seal extractor T 10018 two turns (approx. 3 mm) out of the outer part and lock in position with knurled screw.

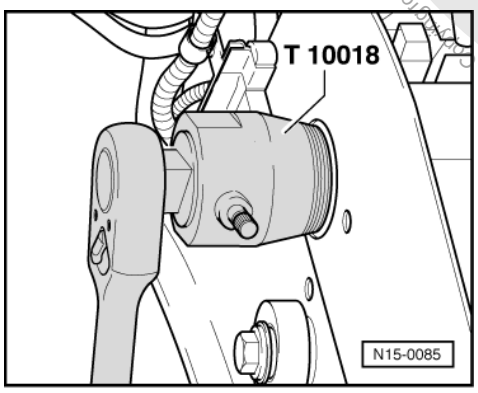

- Oil threaded head of oil seal extractor.
- -> Screw puller T 10018 forcibly as far as possible into oil seal.

Protected by copyright. Copyright by Volkswagen AG. Volkswagen AG does not guarantee or accept any liability with respect to the correctness of information in this document. Copyright by Volkswagen AG. Reproduction for private or commercial purposes in part or in whole is not permitted unless authorised by Volkswagen AG.
satelettronica

- Loosen knurled screw and turn inner part of extractor against camshaft until oil seal has been extracted.

Installing

- Lightly oil sealing lip of oil seal.

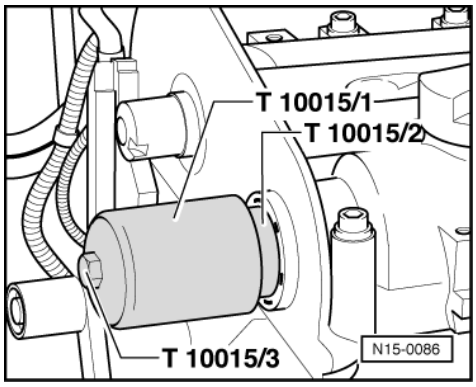

- -> Place the guide sleeve T 10015/2 onto the camshaft journal.
- Slide oil seal over the guide sleeve.
- Press oil seal in onto stop with press sleeve T 10015/1 and bolt T 10015/3.
- Fit camshaft sprockets.

Note:

Observe position of camshaft sprockets to camshaft keyways.

- Hold the respective camshaft sprocket with locking device T 10016 and tighten new bolts to
  20 Nm
  and then turn bolt
  1/4 turn (90°) further.

When installing toothed belt => Page 25 .

The rest of the assembly is basically a reverse of the dismantling sequence.

2.4 - Checking valve guides

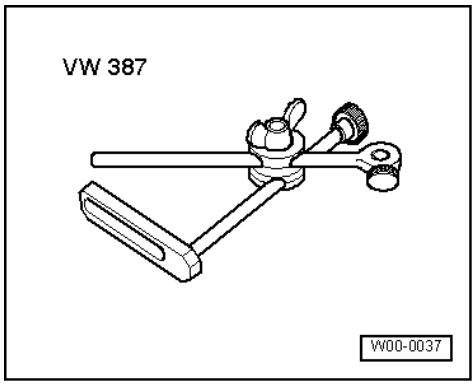

Special tools, workshop equipment, testers, measuring instruments and auxiliary items required

- VW 387 Universal dial gauge bracket
- Dial gauge

Protected by copyright. Copying for private or commercial purposes, in part or in whole, not permitted unless authorised by Volkswagen AG. Volkswagen AG does not guarantee or accept any liability with respect to the correctness of information in this document. Copyright by Volkswagen AG.
satelettronica

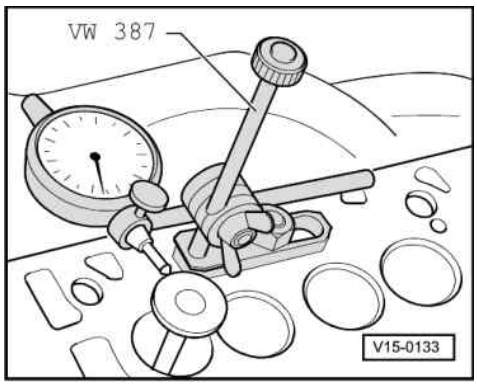

Test sequence

- -> Insert new valve into guide until end of valve stem is flush with end of guide. Due to the slight difference in stem dimensions, ensure that only an inlet valve is used in the inlet guide and an exhaust valve in the exhaust guide.
- Determine rock.
  Wear limit: 0.8 mm

2.5 - Renewing valve guides

Special tools, workshop equipment, testers, measuring instruments and auxiliary items required

- 3360 Driver
- 3361 Press support
- 3363 Hand reamer and cutting fluid

Removing

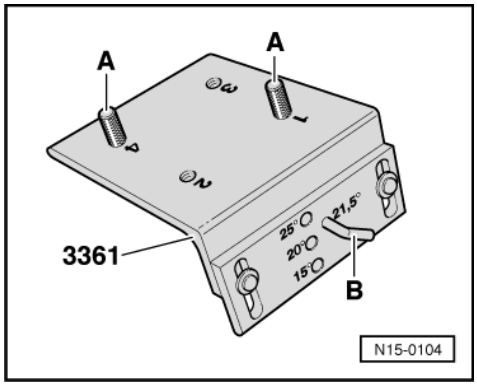

- First check whether the valve seat insert rings and if necessary the cylinder head sealing surface can be reworked. If this is not the case then the valve guide should not be replaced.

-> First set the support as follows:

- Insert locating pin for the cylinder head bolt holes -A- in the screw in positions 1 and 4.
- Place pin -B- in the valve angle hole 21.5 <° .

Protected by copyright. Copying for private or commercial purposes, in part or in whole, is not permitted unless authorised by Volkswagen AG. Volkswagen AG does not guarantee or accept any liability with respect to the correctness of information in this document. Copyright by Volkswagen AG.
satelettronica

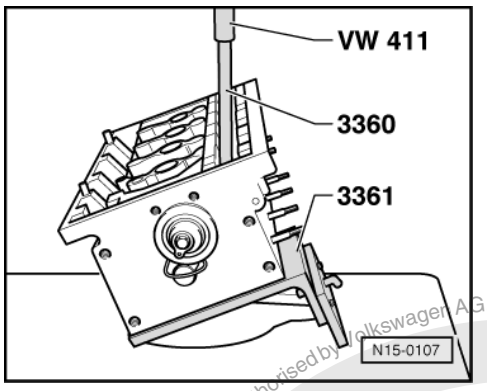

- -> Press the worn valve guides out with drift 3360 from the camshaft side.

Note:

If repair version guides are already fitted in the cylinder head, these must be pressed out from the combustion chamber side. To do this the cylinder head can be supported on the valve spring seats with sleeve VW 421 and press piece VW 447h.

Installing

- Coat the new valve guides with oil and press with drift 3360 into cold cylinder head from the camshaft side until the shoulder makes contact.

Note:

When the shoulder on guide makes contact, the pressure must not exceed 1.0 t otherwise shoulder may break off.

- Ream guides out with hand reamer 3363 using plenty of cutting fluid.
- Rework valve seats => Page 81 .

Protected by copyright. Copying for private or commercial purposes, in part or in whole, is not permitted unless authorised by Volkswagen AG. Volkswagen AG does not guarantee or accept any liability with respect to the correctness of information in this document. Copyright by Volkswagen AG.
satelettronica

2.6 - Renewing valve stem seals

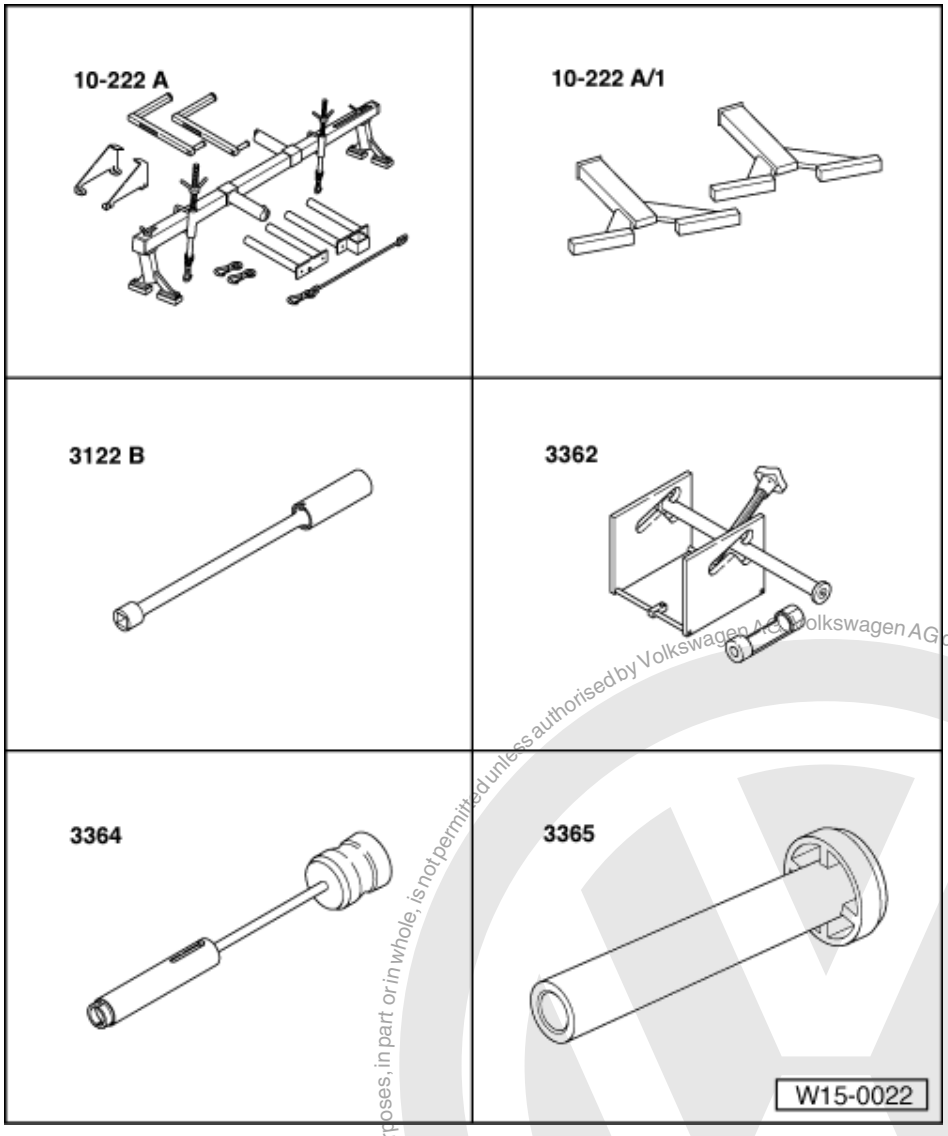

Special tools, workshop equipment, test and measuring appliances and auxiliary items required

- 10-222A Support bracket
- 10-222A/1 Support for support bracket
- 3122B Spark plug spanner
- 3362 Valve spring compressor with 3362/1 press piece
- 3364 Puller
- 3365 Fitting tool

Protected by copyright. Copying for private or commercial purposes, in part or in whole, is not permitted unless authorised by Volkswagen AG. Volkswagen AG does not guarantee or accept any liability with respect to the correctness of information in this document. Copyright by Volkswagen AG.
satelettronica

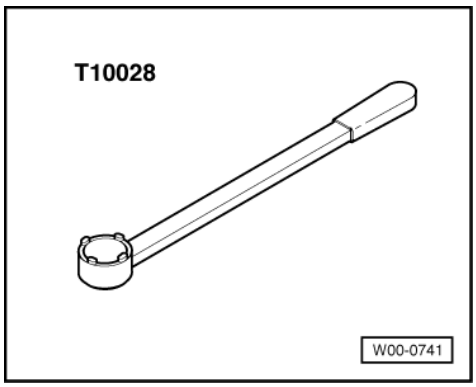

- T 10028 Counter-hold

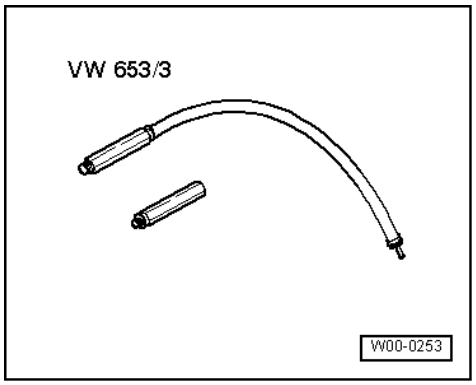

- VW 653/3 Pressure hose

Removing
(with cylinder head fitted)
- First remove main drive toothed belts => Page 25 .
- Then remove camshaft housing => Page 62 .

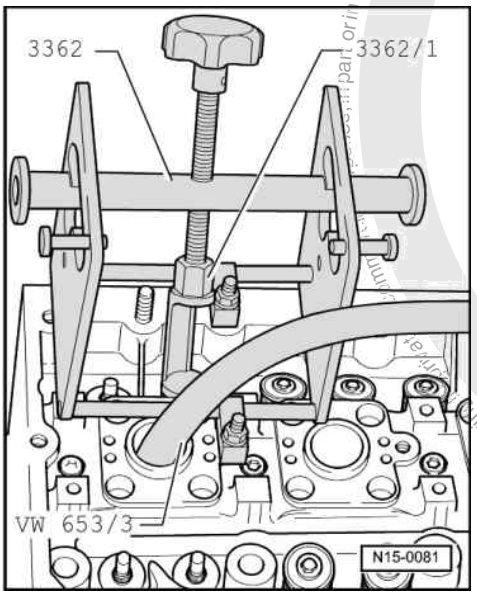

- Remove roller rocker arms and place onto a clean surface. Ensure that roller rocker arms are not interchanged.
- Remove spark plugs with spark plug spanner 3122B.
- Set piston of appropriate cylinder to "bottom dead centre".

satelettronica
Protected by copyright. Copyright by Volkswagen AG. Volkswagen AG does not guarantee or accept any liability with respect to the correctness of information in this document. Copyright by Volkswagen AG.

- -> Mount fitting tool 3362 with press piece 3362/1.
- Screw pressure hose VW 653/3 into the spark plug thread.
- Connect pressure hose to compressed air system supplying
  at least 6 bar
  and remove valve springs.
- Pull off valve stem seals with 3364.

Installing

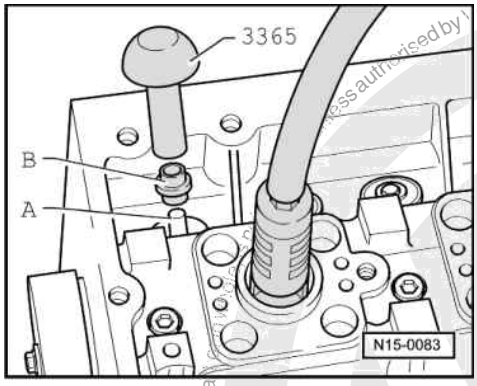

- -> Place the plastic sleeve supplied on the appropriate valve stem. This will prevent the new valve stem seal being damaged.
- Place new valve stem seal in fitting tool 3365.
- Oil valve stem seal sealing lip and press carefully onto the valve guide.

When installing camshaft housing => Page 62 .

Installing toothed belt and adjusting timing => Page 25 .

The rest of the assembly is basically a reverse of the dismantling sequence.

Protected by copyright. Copying for private or commercial purposes, in part or in whole, is not permitted unless authorised by Volkswagen AG. Volkswagen AG does not guarantee or accept any liability with respect to the correctness of information in this document. Copyright by Volkswagen AG.
satelettronica

17 - Lubrication

1 - Removing and installing parts of the lubrication system

1.1 - Removing and installing parts of the lubrication system

Note:
The oil level must not be above the max. mark - danger of damaging catalyst!
Marks => Page 97 , Fig. 1 .
Checking oil pressure => Page 102
Oil system capacity1):
with oil filter 3.2 ltr.
1) Up-to-date figures:
=> Exhaust emissions test binder
Engine oil specifications:
Use engine oil to VW standard 500 00, 501 01 or 502 00. Only in exceptional cases: Multi-grade oils corresponding to API-SF or SG.

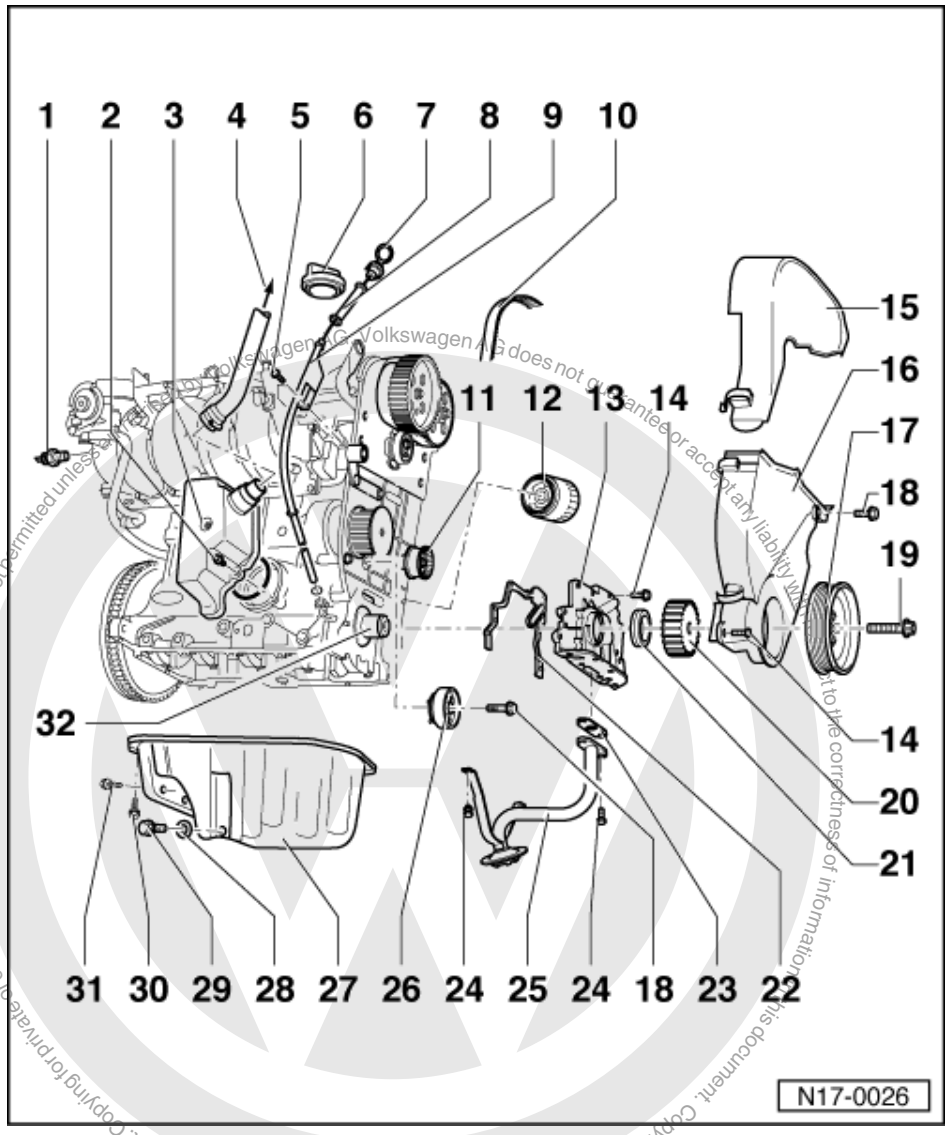

satelettronica

1 0.30 bar oil pressure switch (F1),
25 Nm
- Identification: green
- Checking => Page 102
- If sealing ring is leaking nip open and replace.

2 10 Nm

3 Oil separator

4 To air cleaner

5 20 Nm

6 Cap
- Renew seal if damaged

7 Dipstick
- The oil level must not be above the max. mark!
- Markings => Fig. 1

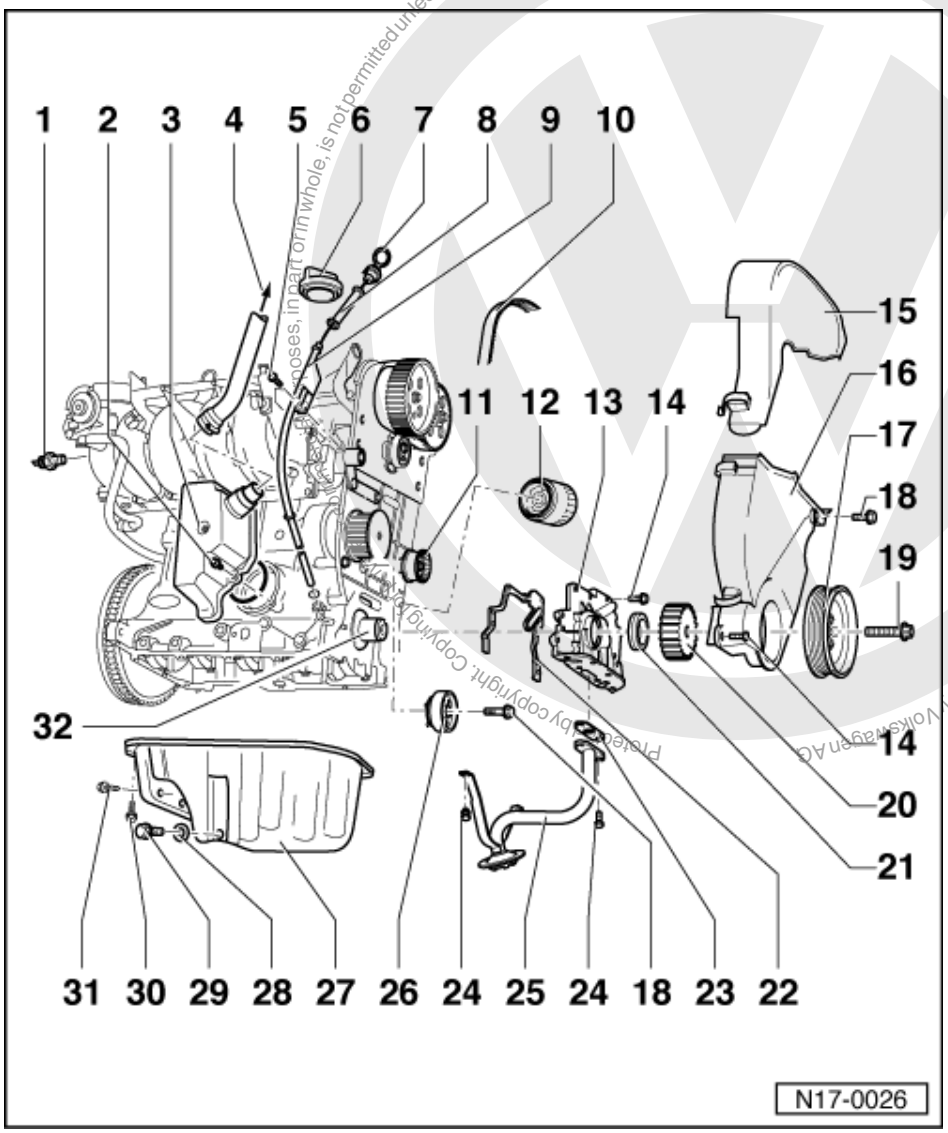

8 Guide
- Pull off to extract oil

9 Guide tube

10 Coupling drive toothed belt
- Removing and installing
=> Page 25
- Check for wear
- Do not kink

Presented by copyright. Copyright by Volkswagen AG.
Copyright by Volkswagen AG. Volkswagen AG does not guarantee or accept any liability with respect to the correctness of information in this document. Copying, in part or in whole, is not permitted unless authorised by Volkswagen AG.
satelettronica

11 Idler roller

12 Oil filter

- Loosen at hexagon bolt head
- Tighten by hand
- Observe installation instructions on oil filter

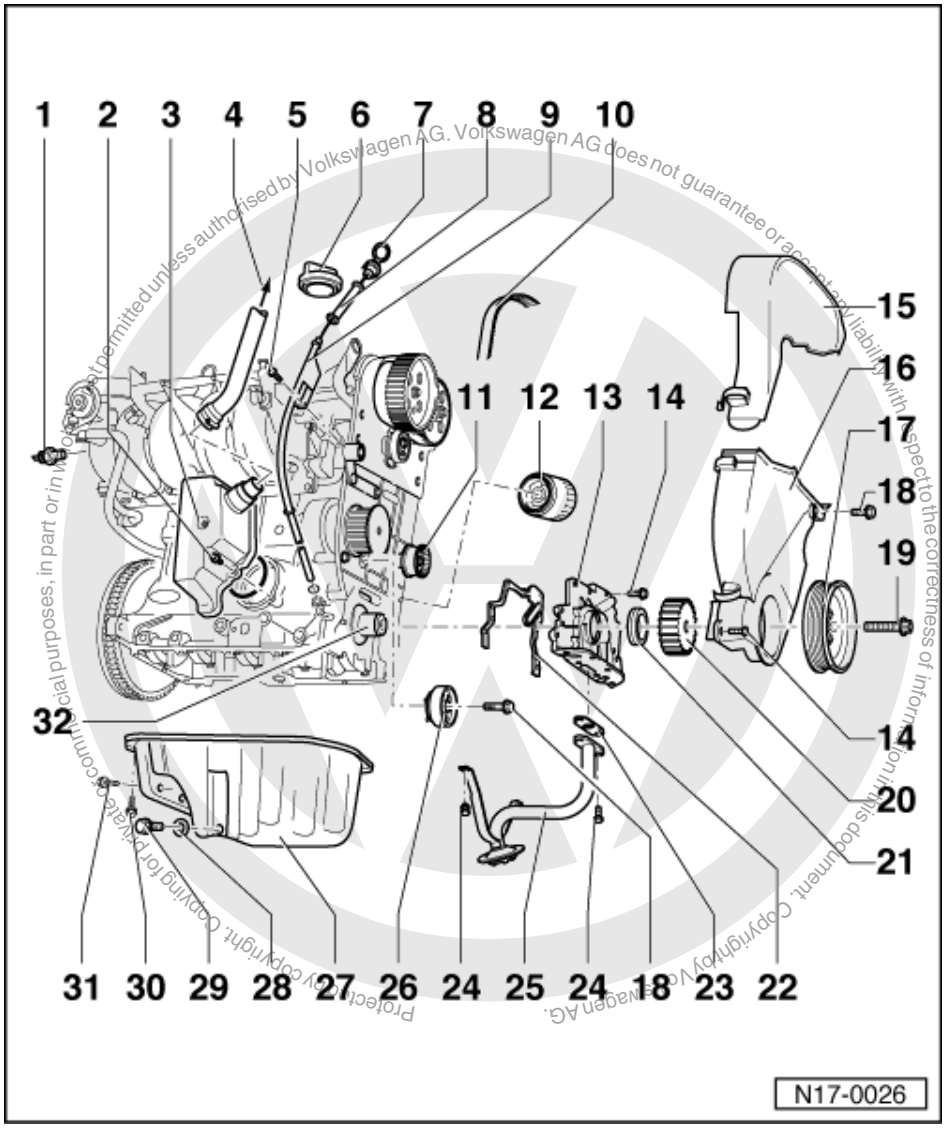

13 Oil pump

- When installing note follower on crankshaft
  => Page 96 , item 32
- Must be located on dowel sleeves
- Removing and installing
  => Page 99

14 12 Nm

15 Toothed belt guard - upper part

16 Toothed belt guard - lower part

17 Belt pulley

- When installing note fixing arrangement
- Removing and installing ribbed belt => Page 22

18 20 Nm

satelettronica

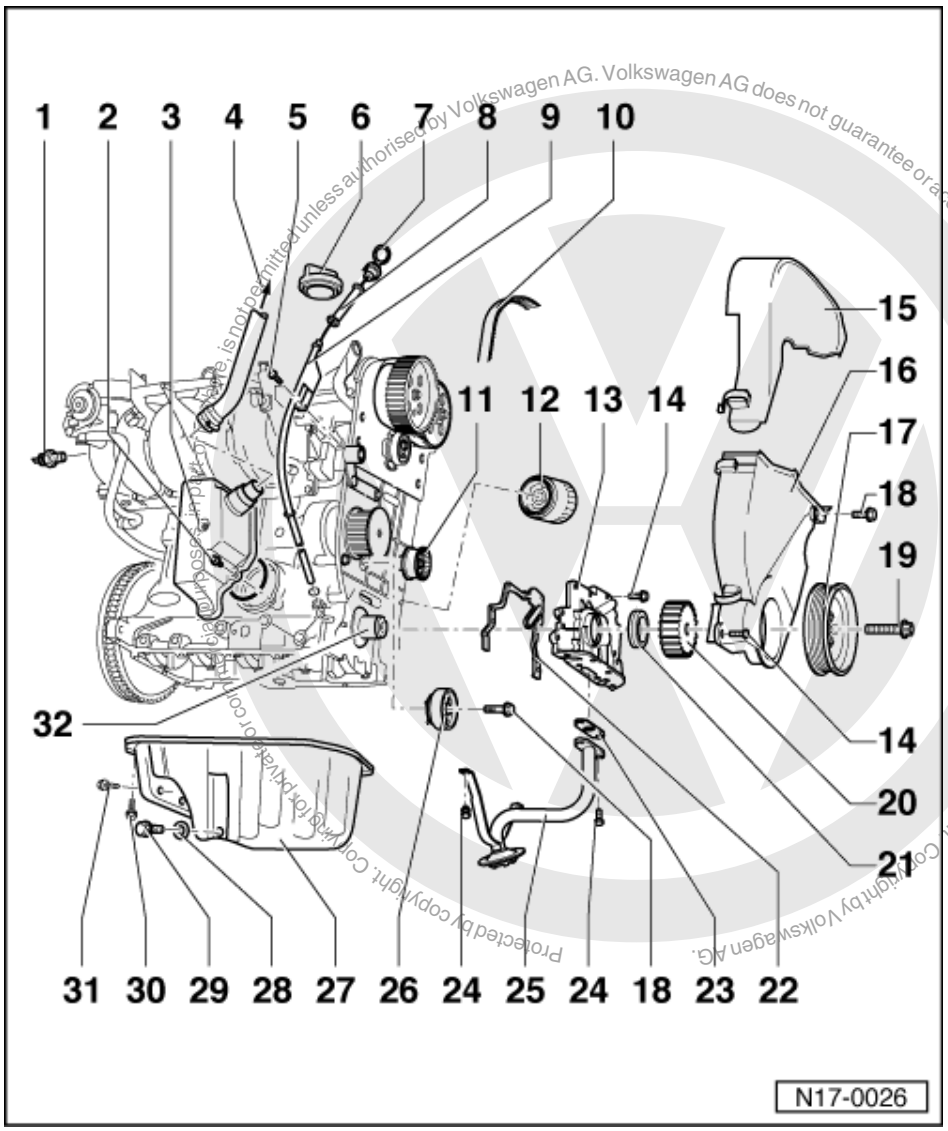

Protected by copyright. Copying for private or commercial purposes, in part or in whole is not permitted unless authorised by Volkswagen AG. Volkswagen AG does not guarantee or accept any liability with respect to the correctness of information in this document. Copyright by Volkswagen AG.

19 90 Nm + 1/4 turn (90 °) further

- Renew
- Oil threads
- The turning further can be done in several stages
- The turning further angle can be measured with a commercial protractor e.g. Hazet 6690

20 Crankshaft toothed belt sprocket

21 Oil seal

- Renewing => Page 40

22 Gasket

- Renew
- Must be located on dowel sleeves

23 Gasket

- Renew

satelettronica

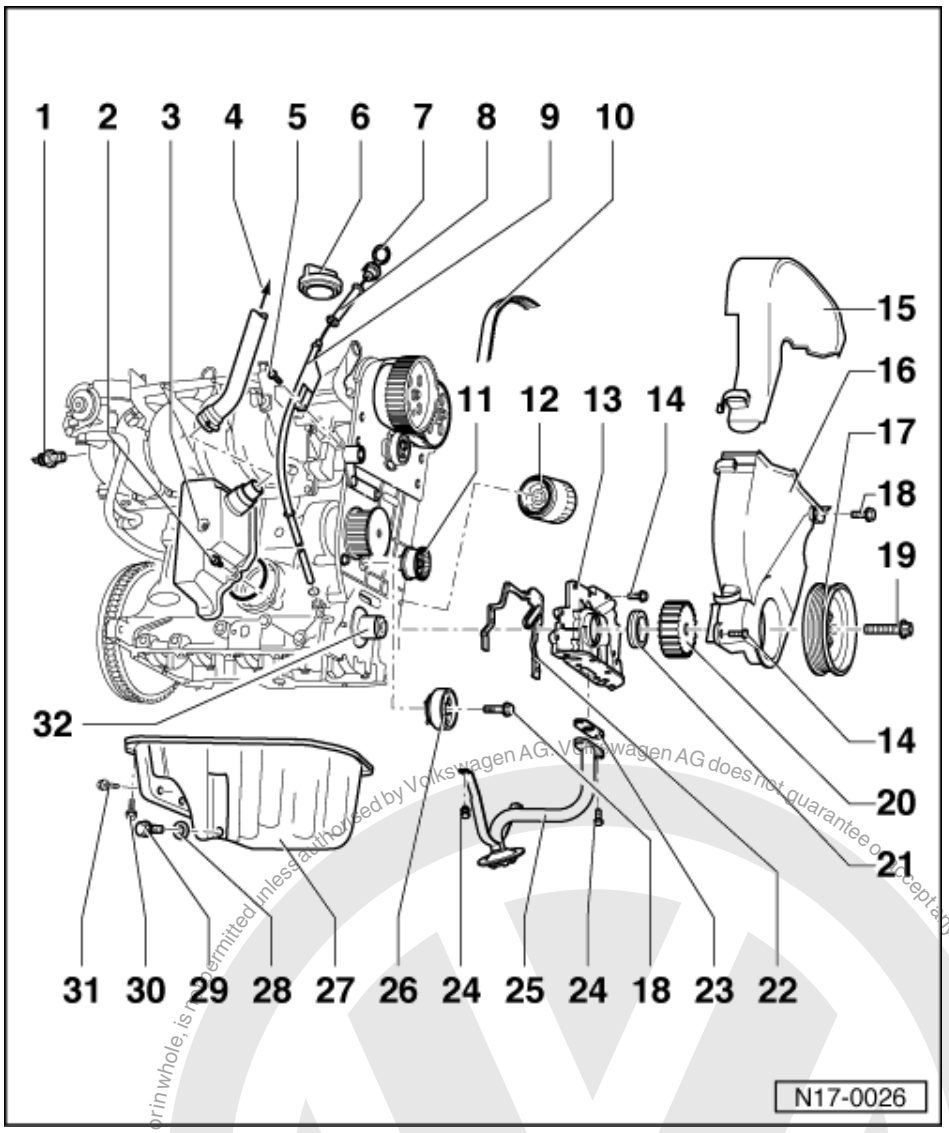

24 10 Nm

25 Suction pipe

- Clean strainer if soiled

26 Tensioner

- Tensioning toothed belts
  => Page 25

27 Sump

- Removing and installing
  => Page 97
- Clean sealing surface before installing
- Install with silicone sealant
  D 176 404 A2
  => Page 97

Protected by copyright. Copying for commercial purposes, in part or in whole, is not permitted unless authorised by Volkswagen AG. Volkswagen AG does not guarantee or accept any liability with respect to the correctness of information in this document. Copyright by Volkswagen AG.
satelettronica

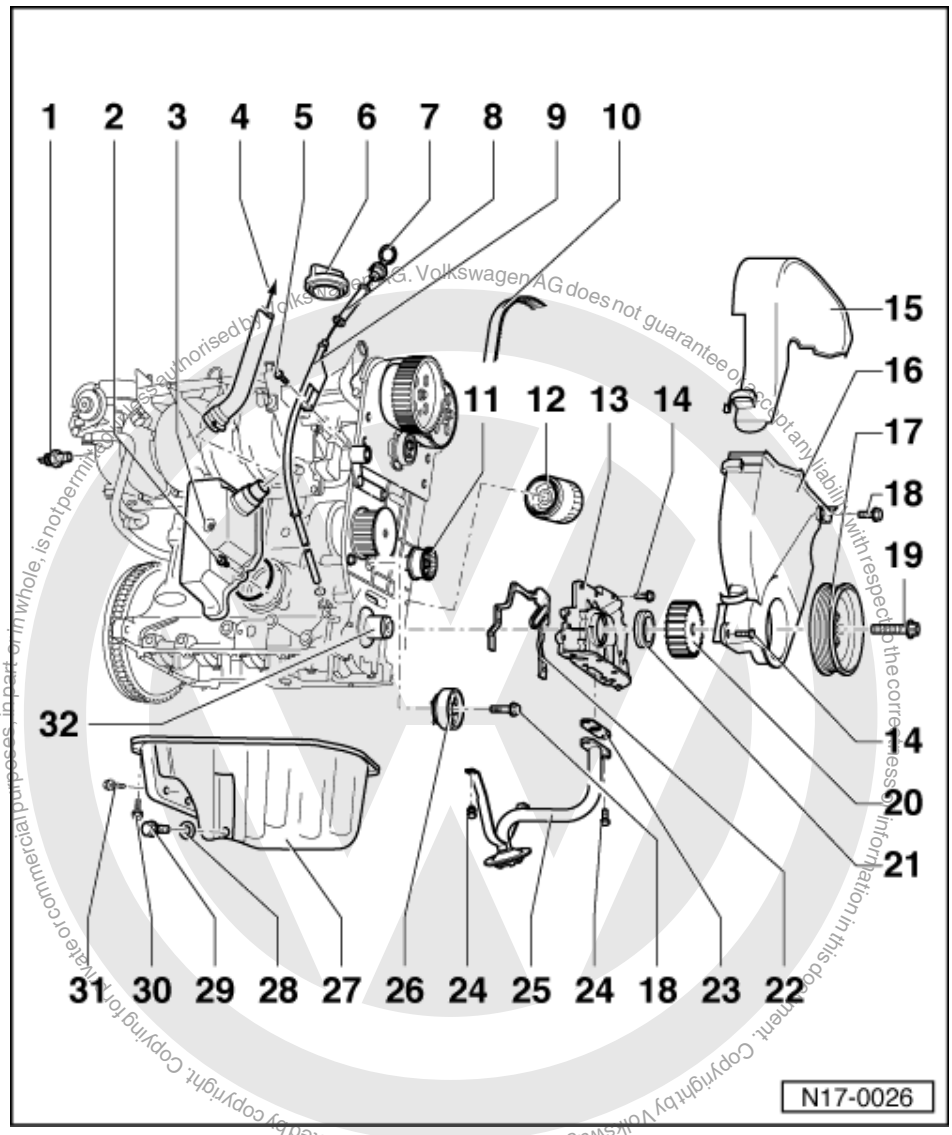

28 Seal
- Renew

29 Oil drain plug, 30 Nm

30 13 Nm
- Loosen and tighten only bolts on flywheel end with socket insert T10058

31 45 Nm

32 Driver
- Coat with oil before installing oil pump

satelettronica

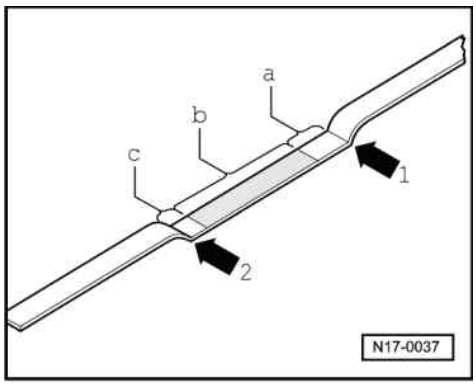

-> Fig. 1 Markings on oil dipstick

1 - max. mark
2 - min. mark
a - Area above hatched field up to max. mark: Do not replenish with engine oil!
b - Oil level within hatched field: can be replenished with engine oil
c - Area from min. mark up to hatched field: replenish with max. 0.5 ltr. of engine oil!

1.2 - Removing and installing oil sump

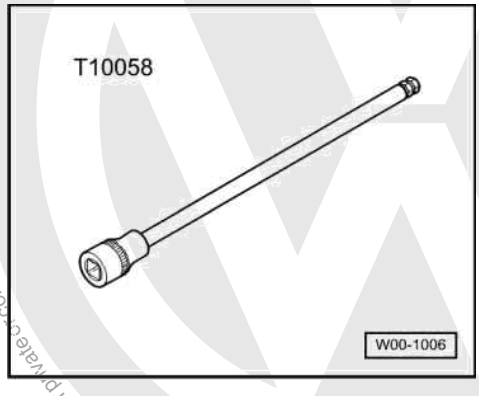

Special tools, workshop equipment, testers, measuring instruments and auxiliary items required

- T10058 Key

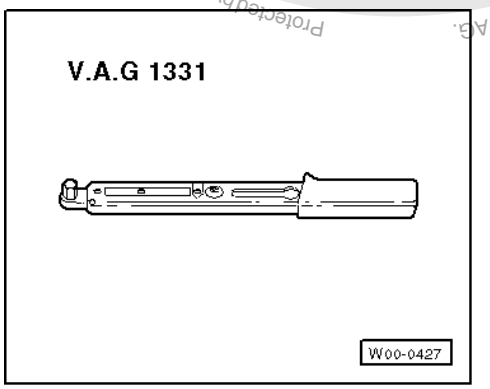

- V.A.G 1331 Torque wrench (5...50 Nm)
- Hand drill with plastic brush
- Flat scraper
- Silicone sealant D176404 A2

Copyright by Volkswagen AG. Volkswagen AG does not guarantee or assume liability with respect to the correctness of information in this document. Copyright by Volkswagen AG. Protected by copyright. Copy for private or commercial purposes, in part or in whole, is not permitted unless authorised by Volkswagen AG.
satelettronica

Work sequence

- Remove noise insulation tray.
- Drain engine oil.
- Remove front exhaust pipe from exhaust manifold.
- Remove the two connecting bolts from gearbox bell housing to sump support.
- Unbolt sump sealed with liquid gasket.
- Remove sump, it may be necessary to release sump by tapping lightly with a rubber head hammer.
- Remove sealant residue on cylinder block with a flat scraper.

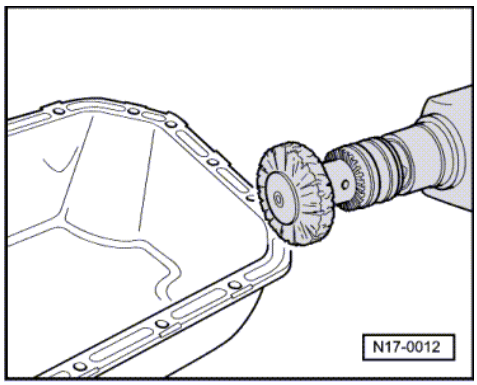

- -> Remove sealant residue on the sump with a rotating brush, e.g. a hand drill with a plastic brush (wear eye protection).
- Clean sealing surface, must be free of oil and grease.

Installing

Notes:

- Note the use by date of the sealant.
- Sump must be installed within 5 minutes of applying silicone sealing compound.
- Sump can be offered up easier and with greater security if, for guide purposes, M6 studs are inserted into the cylinder block flange at two positions.

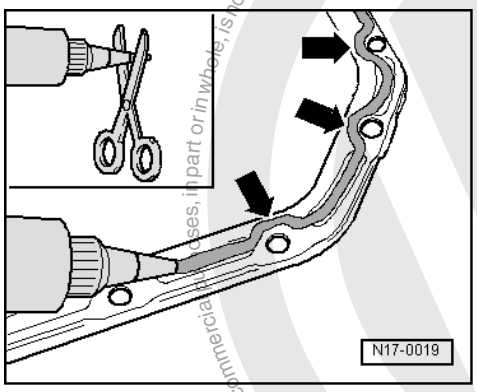

- -> Cut off tube nozzle at forward marking (nozzle approx. 3 mm ø).
- Apply silicone sealing compound, as shown, to clean sump sealing surface. Sealing compound bead must be.
  - 2...3 mm thick.
  - and run on inside of bolt holes -arrows-.

Note:

The sealing compound bead must not be thicker, otherwise excessive sealing compound will enter the sump and may block the oil suction pipe strainer.

- Install sump immediately and tighten all sump bolts lightly.
- Tighten sump bolts to
  13 Nm.

satelettronica

- Tighten sump/gearbox bolts to 45 Nm.

Note:

After installing sump the sealant must be allowed to dry for approx. 30 minutes before engine oil is replenished.

1.3 - Removing and installing oil pump

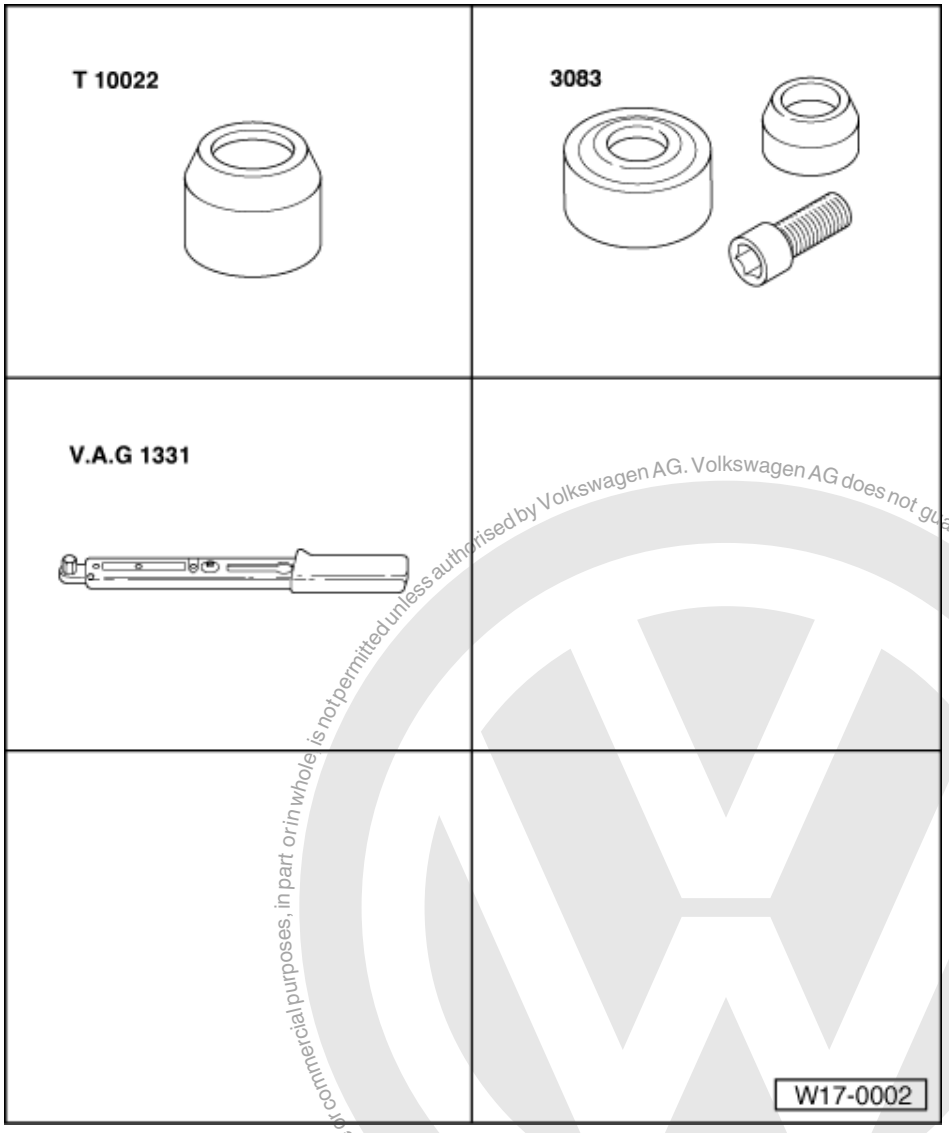

Special tools, workshop equipment, test and measuring appliances and auxiliary items required

- T10022 Sleeve
- 3083 Oil seal fitting tool
- V.A.G 1331 Torque wrench (5...50 Nm)

Protected by copyright. Copying for private or commercial purposes, in part or in whole, is not permitted unless authorised by Volkswagen AG. Volkswagen AG does not guarantee or accept any liability with respect to the correctness of information in this document. Copyright by Volkswagen AG.
satelettronica

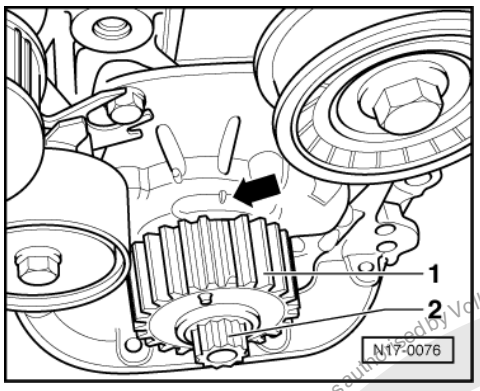

Removing

- Remove main drive toothed belt => Page 25 ; Removing, installing and tensioning toothed belt.
- -> Secure crankshaft toothed belt sprocket -1- to crankshaft with old securing screw -2-.
- Position crankshaft at TDC No. 1 cylinder:

  The tooth ground down on the toothed belt sprocket must align with mark on the oil pump -arrow-.

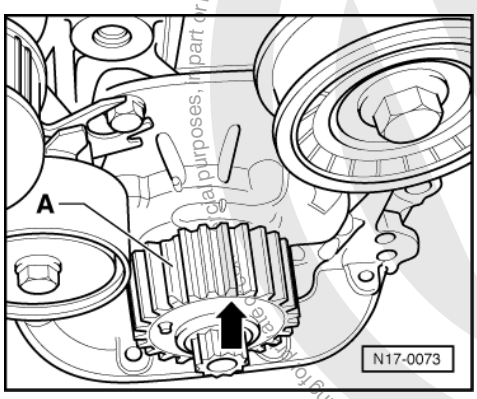

- -> Turn crankshaft/toothed belt sprocket three teeth anti-clockwise away from TDC:

  The third tooth -arrow- to the right of the tooth ground down -A- on the toothed belt sprocket must align with TDC mark on the oil pump housing.

Note:

This procedure moves the crankshaft to the correct installation position for the oil pump. One of the polygon cams on the crankshaft is uppermost.

- Remove main drive tensioning roller.
- Remove sump => Page 97 .
- Remove suction pipe => Page 95 , item 25 .
- Remove crankshaft toothed belt sprocket.
- Remove oil pump.
- Remove gasket.
- Remove sealant remnants on cylinder block with a flat scraper.
- Clean sealing surfaces, they must be oil and grease free.

Protected by Copyright. Copying for private or commercial purposes, in part or in whole, is not permitted unless authorised by Volkswagen AG. Volkswagen AG does not guarantee or accept any liability with respect to the correctness of information in this document. Copyright by Volkswagen AG.
satelettronica

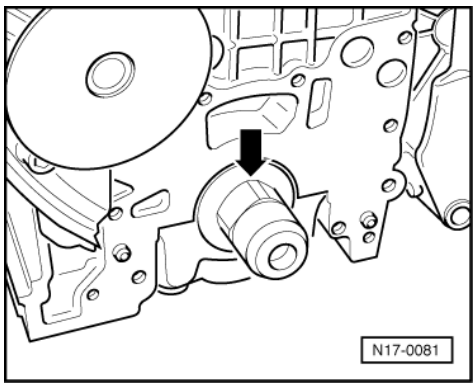

Installing

Conditions

- -> One of the polygon cams -arrow- on the crankshaft is uppermost.

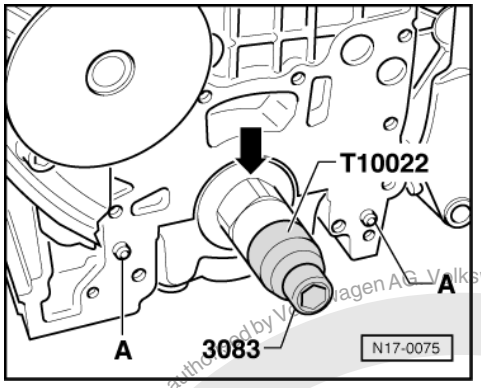

Work sequence

- -> Fit sleeve T10022 and hexagon socket head bolt from 3083 onto crankshaft and tighten hand tight.
- Fit new gasket onto guide pins -A-.

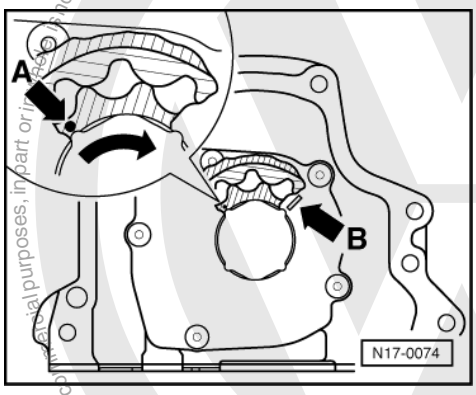

- -> Position one of the oil pump inner rotor markings arrow -A- on installation position mark arrow -B- on oil pump housing cover.
- Coat the four crankshaft polygon cams with oil.
- Lightly oil sealing lip of oil pump oil seal.
- Guide oil pump carefully onto crankshaft polygon cams.
- Align inner rotor to crankshaft polygon cams by turning slightly if necessary.
- Then slide oil pump carefully onto guide pins.
- Secure oil pump with new bolts.
  Tightening torque: 12 Nm
- Remove sleeve T10022.
- Install suction pipe => Page 95 , item 25 .
- Install sump => Page 97 .

satelettronica

- Install main drive tensioning roller, install toothed belt and tension => Page 25 , Removing, installing and tensioning toothed belt.

1.4 - Checking oil pressure and oil pressure switch

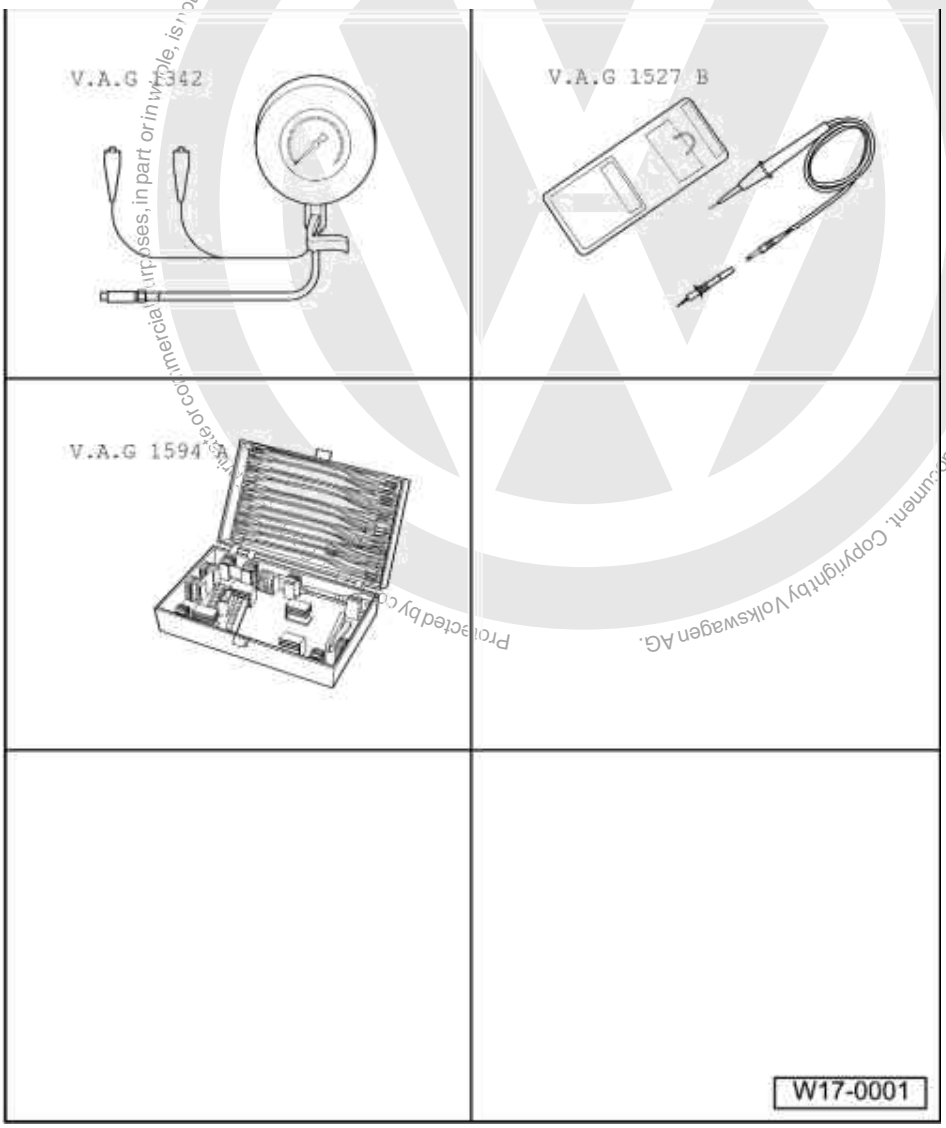

Special tools, workshop equipment, test and measuring appliances and auxiliary items required

- V.A.G 1342 Oil pressure tester
- V.A.G 1527 B Diode test lamp
- V.A.G 1594 A Adapter set

Note:

Functional check and servicing the optical and acoustic oil pressure warning:

=> Current flow diagrams, Electrical fault finding and Fitting locations binder

satelettronica

Test sequence

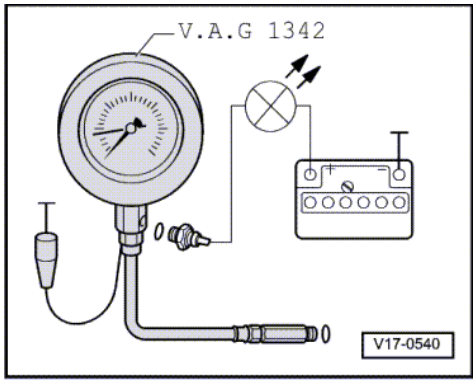

- -> Remove oil pressure switch (F1) and screw into tester.
- Screw tester into the cylinder head in place of the oil pressure switch.
- Connect brown wire of tester to earth (-).
- Connect diode test lamp V.A.G 1527 B using aux. cables from V.A.G 1594 A to battery positive (+) and oil pressure switch.
- Start engine and increase speed slowly.
  At
  0.3...0.7 bar
  the LED must light up, otherwise renew oil pressure switch.
- Increase engine speed further.
  At 2000 rpm and an oil temperature of 80 °C the oil pressure should be at least 2.0 bar.

At higher engine speed the oil pressure must not exceed 7.0 bar.

Protected by copyright. Copying for private or commercial purposes, in part or in whole, is not permitted unless authorised by Volkswagen AG. Volkswagen AG does not guarantee or accept any liability with respect to the correctness of information in this document. Copyright by Volkswagen AG.
satelettronica

19 - Cooling system

Protected by copyright. Copying for private or commercial purposes, in part or in whole, is not permitted unless authorised by Volkswagen AG. Copyright by Volkswagen AG. VW does not guarantee or accept any liability with respect to the correctness of information in this document.

1 - Removing and installing parts of cooling system

1.1 - Removing and installing parts of cooling system

Notes:

- When the engine is warm the cooling system is under pressure. If necessary release pressure before commencing repair work.
- Hoses are secured with spring-type clips. In cases of repair only use spring-type clips.
- V.A.G 1921 pliers are recommended when installing spring-type clips.

Perform cooling system leakage test with cooling system tester V.A.G 1274 and adapter 1274/9.

Parts of cooling system body side =>Page 105 .

Parts of cooling system engine side => 108 .

Coolant hose connection diagram =>Page 113 .

Draining and filling with coolant=> Page 115 .

Coolant mixture ratios => Page 115 , draining and filling with coolant

satelettronica

1.2 - Parts of cooling system body side

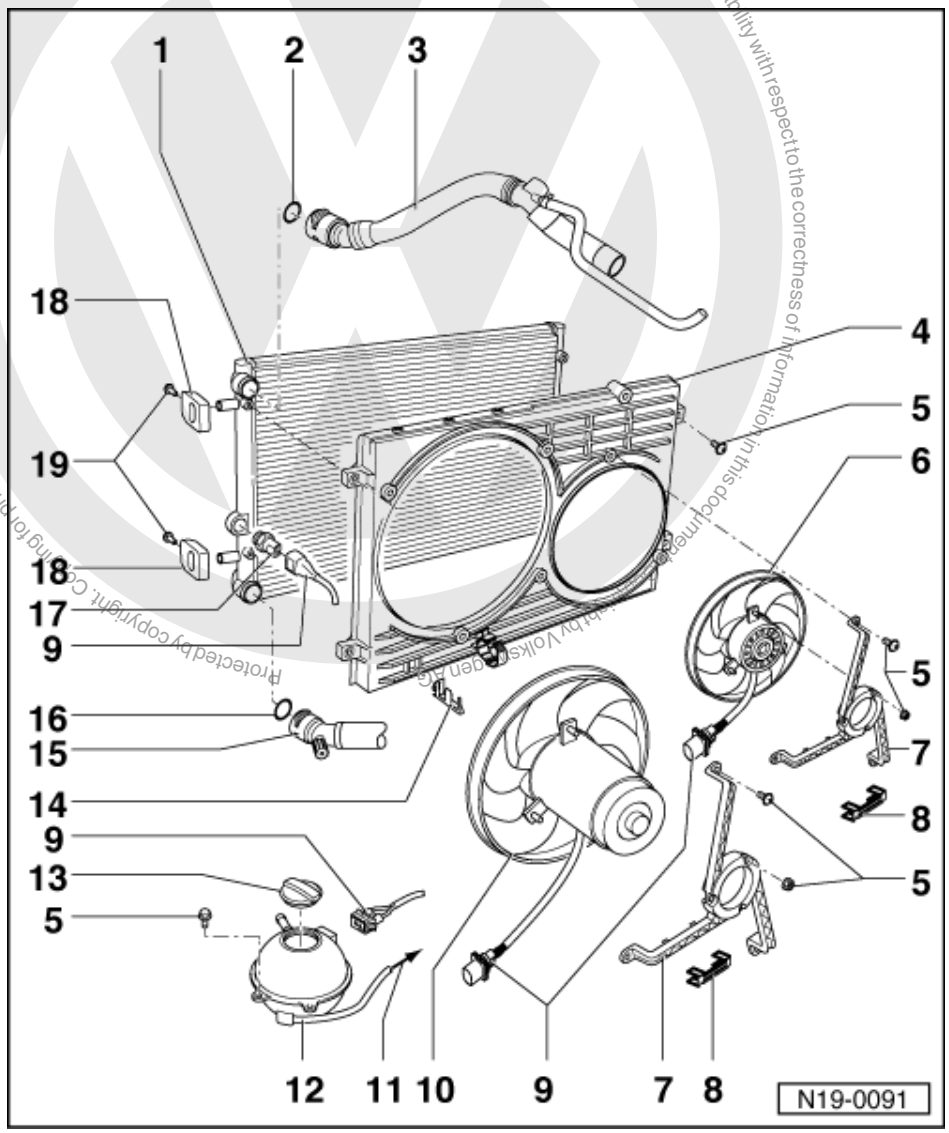

1 Radiator
- Removing and installing =>Page 117
- After replacing renew entire coolant

2 O-ring
- Renew

3 Upper coolant hose
- Secured to radiator with retaining clip
- Coolant hose connection diagram =>Page 113

4 Air ducting

5 10 Nm

6 Additional fan
- Only vehicles with optional equipment

satelettronica

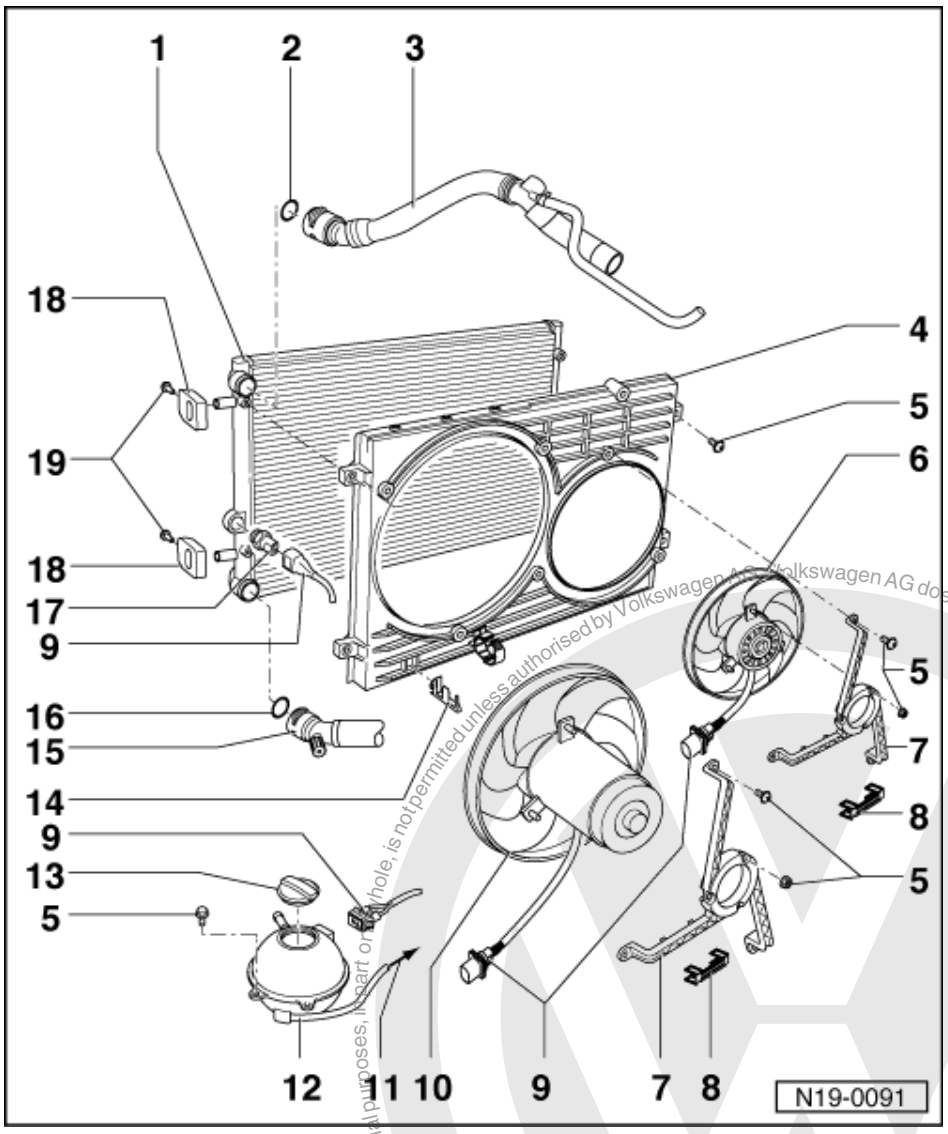

7 Fan ring
8 Retaining clip
- Check seated securely

9 Connector
10 Radiator fan
11 To thermostat housing
- =>Page 109 , Item 7
- Coolant hose connection diagram =>Page 113

12 Expansion tank
13 Cap
- Check with cooling system tester V.A.G 1274 and adapter V.A.G 1274/8
- Test pressure 1.4...1.6 bar

14 Bracket
- For radiator fan connector

Protected by copyright. Copying for private or commercial purposes, in part or in whole, is not permitted unless authorised by Volkswagen AG. Volkswagen AG does not guarantee or accept any liability with respect to the correctness of information in this document. Copyright by Volkswagen AG.
satelettronica

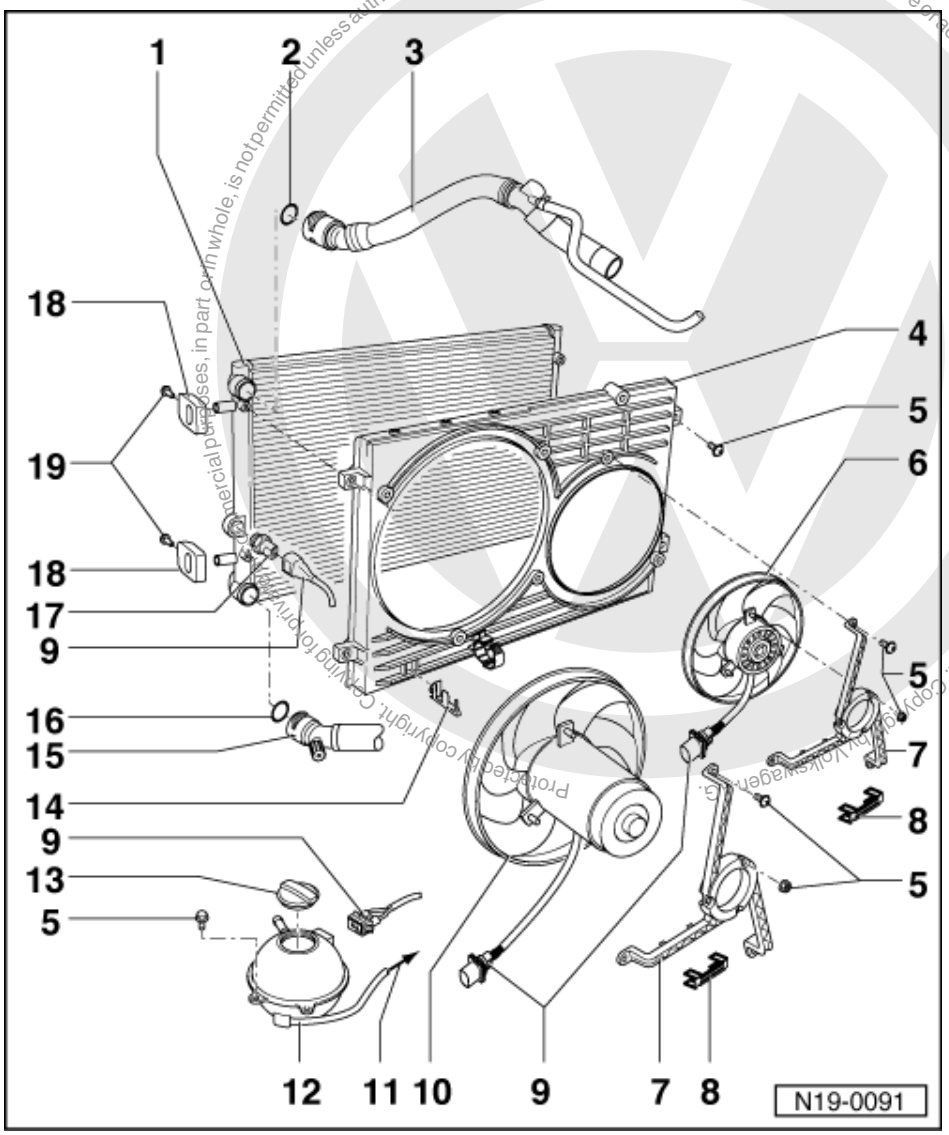

15 Lower coolant hose

- Secured to radiator with retaining clip
- Coolant hose connection diagram =>Page 113

16 O-ring

- Renew

17 Thermo-switch (F18), 35 Nm

- For electric fan
- Switching temperatures:
  Stage 1
  on: 92...97 °C
  off: 84...91 °C
  Stage 2
  on: 99...105 °C
  off: 91...98 °C

18 Bracket

- For radiator
- Note fitting position
- Note various versions

19 15 Nm

satelettronica

1.3 - Parts of cooling system engine side

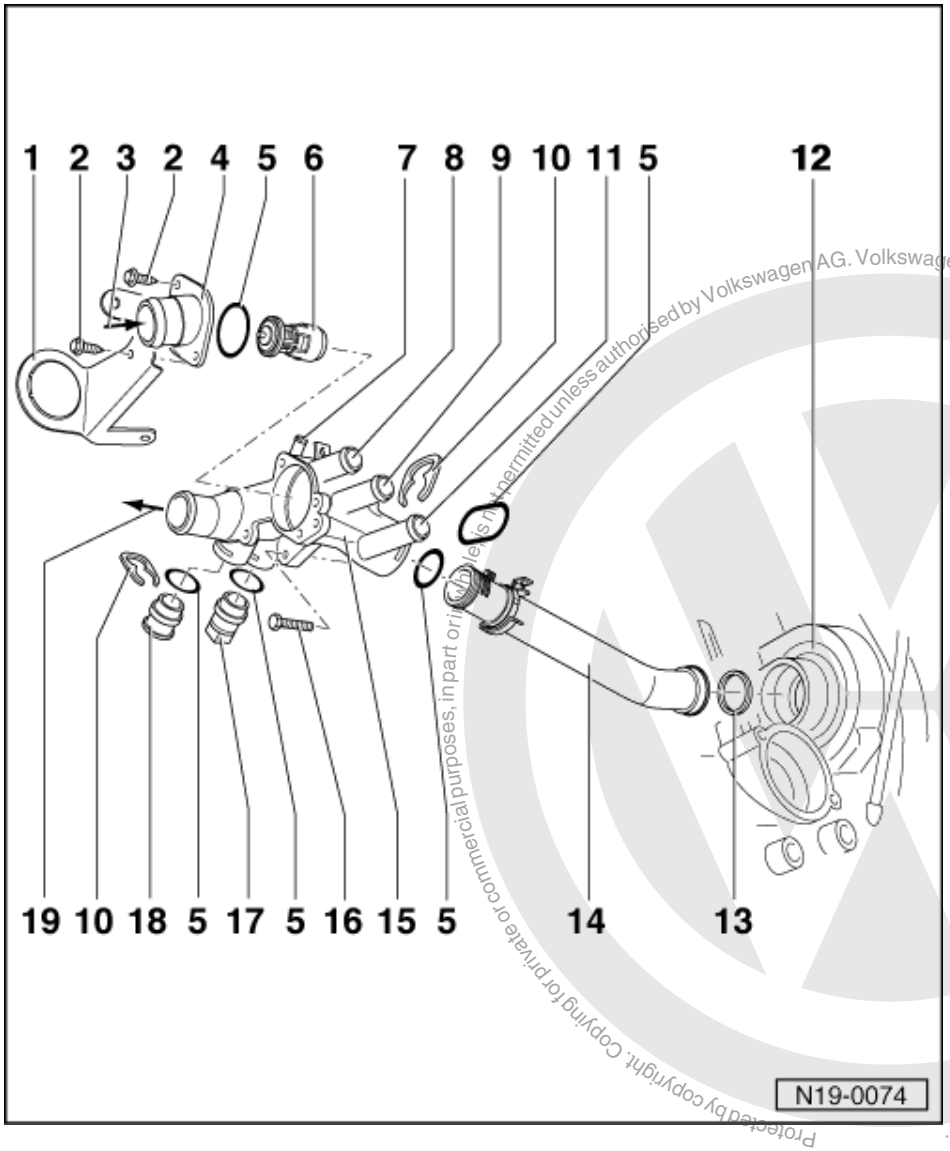

Protected by copyright. Copying for private or commercial purposes, in part or in whole is not permitted unless authorised by Volkswagen AG. Volkswagen AG does not guarantee or accept any liability with respect to the correctness of information in this document. Copyright by Volkswagen AG.
satelettronica

Thermostat side

1 Retainer
2 Self-tapping bolt
3 From bottom of radiator
- =>Page 105 , Item 3

4 Connection
5 O-ring
- Renew

6 Coolant thermostat
- Checking operation: heat-up thermostat in water the thermo element pin must move out
- Temperature check: Opening starts (approx. 80 °C) and ends (approx. 95 °C) cannot be checked.

Protected by copyright. Copying for private or commercial purposes, in part or in whole, is not permitted unless authorised by Volkswagen AG. Volkswagen AG does not guarantee or accept any liability with respect to the correctness of information in this document. Copyright by Volkswagen AG.

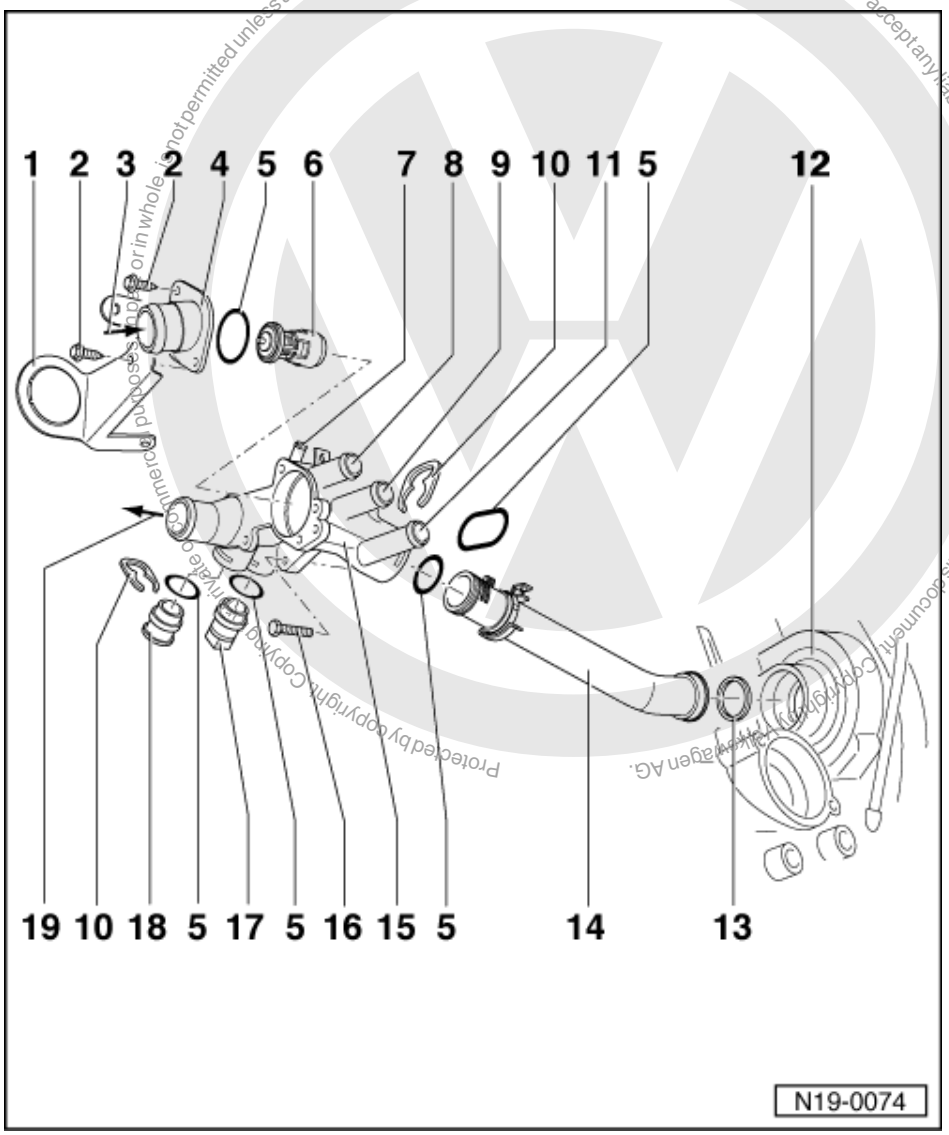

7 To top of expansion tank
8 To heat exchanger
9 From expansion tank
- =>Page 106 , Item 11

10 Retaining clip
11 From heat exchanger
12 Coolant pump housing on cylinder block
13 Seal
- Renew

14 Coolant pipe
15 Thermostat housing
16 10 Nm

satelettronica

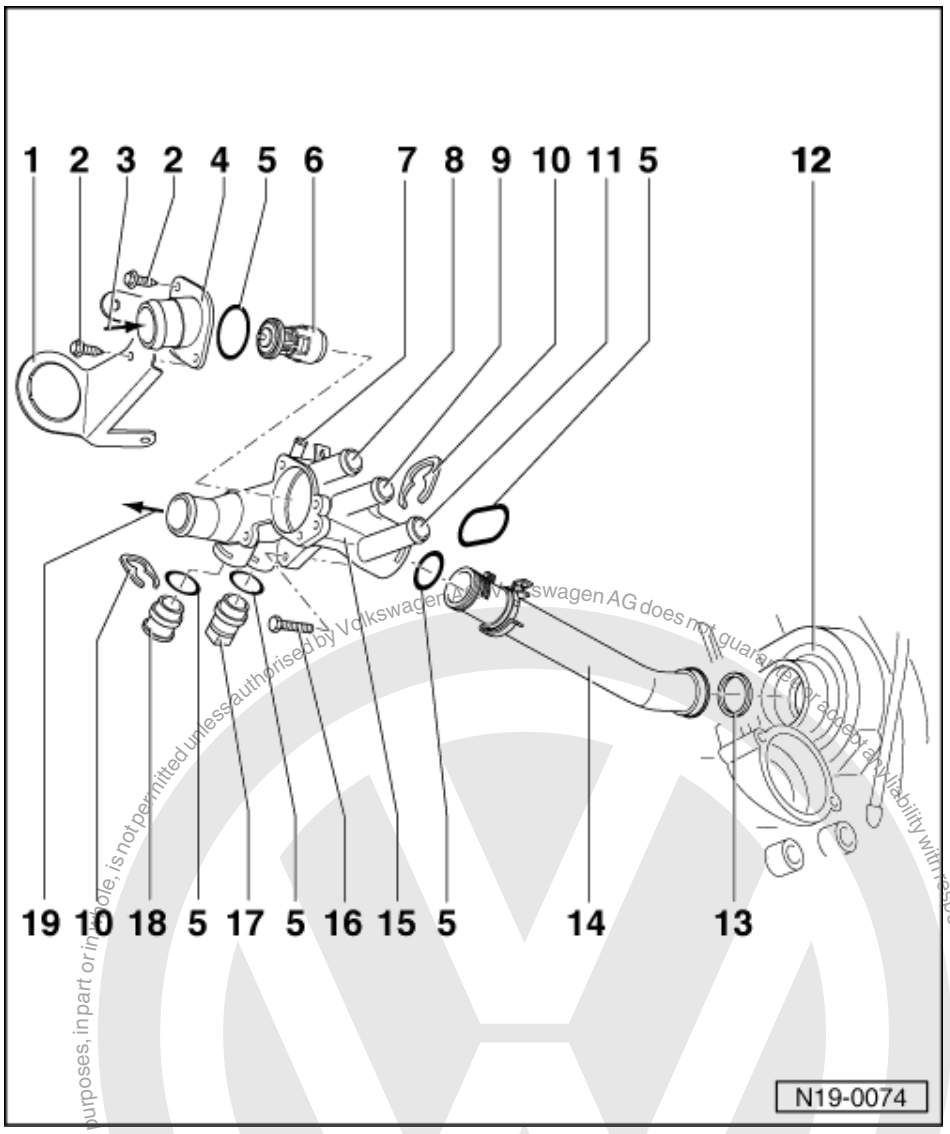

17 Coolant temperature sender (G62)
- With coolant temperature gauge sender (G2)

18 Sealing plug

19 To top of radiator
- =>Page 105 , Item 3

Protected by copyright. Copying for private or commercial purposes, in part or in whole, is not permitted unless authorised by Volkswagen AG. Volkswagen AG does not guarantee or accept any liability with respect to the correctness of information in this document. Copyright by Volkswagen AG.
satelettronica

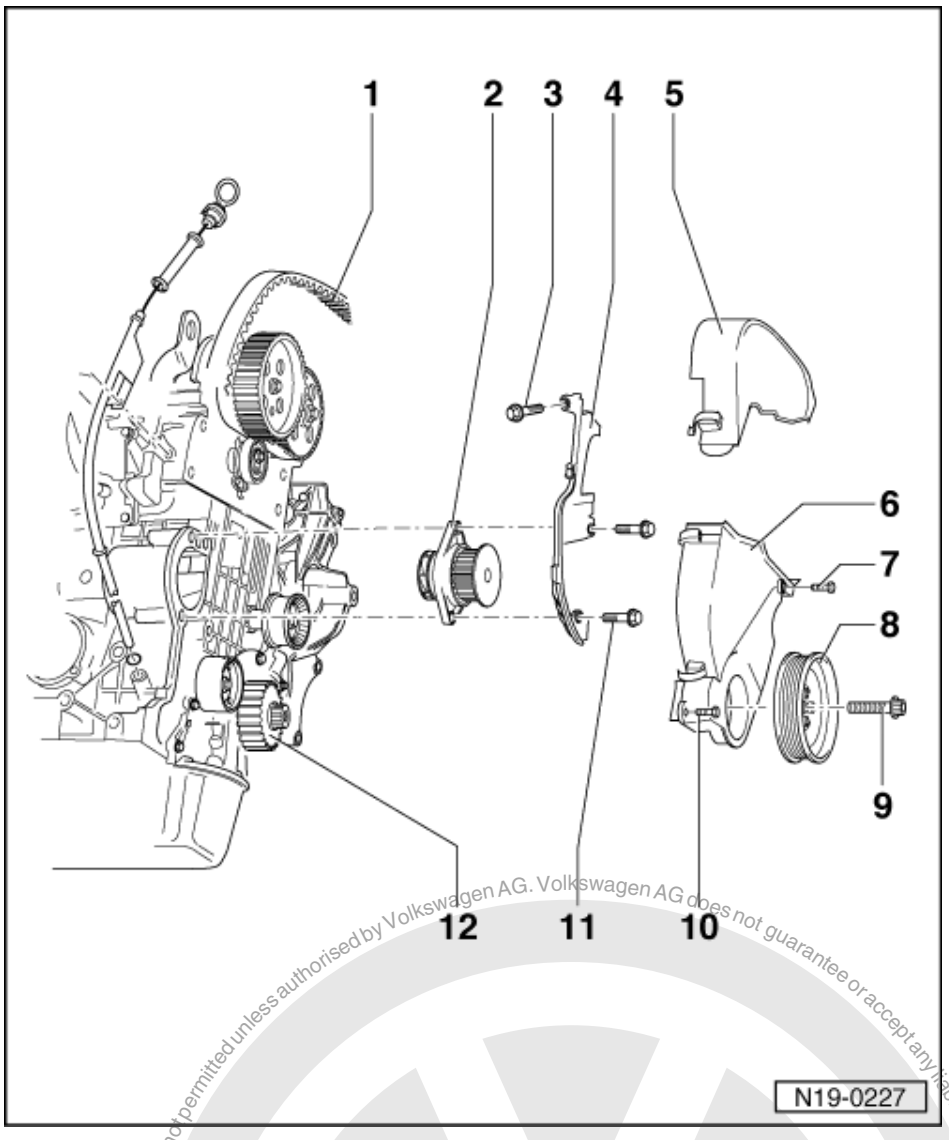

Coolant pump side

1 Main drive toothed belt
- Mark D.O.R. before removing
- Check for wear
- Do not kink
- Toothed belt routing => Fig. 1
- Removing, installing and tensioning => Page 25

2 Coolant pump
- Check for ease of movement
- If damaged or leaking renew complete
- Removing and installing => Page 119

3 10 Nm

4 Rear toothed belt guard

5 Toothed belt guard - upper part

6 Toothed belt guard - lower part

Protected by copyright. Copying for private or commercial purposes, in part or in whole, is not permitted unless authorised by Volkswagen AG. Volkswagen AG does not guarantee or accept any liability with respect to the correctness of information in this document. Copyright by Volkswagen AG.
satelettronica

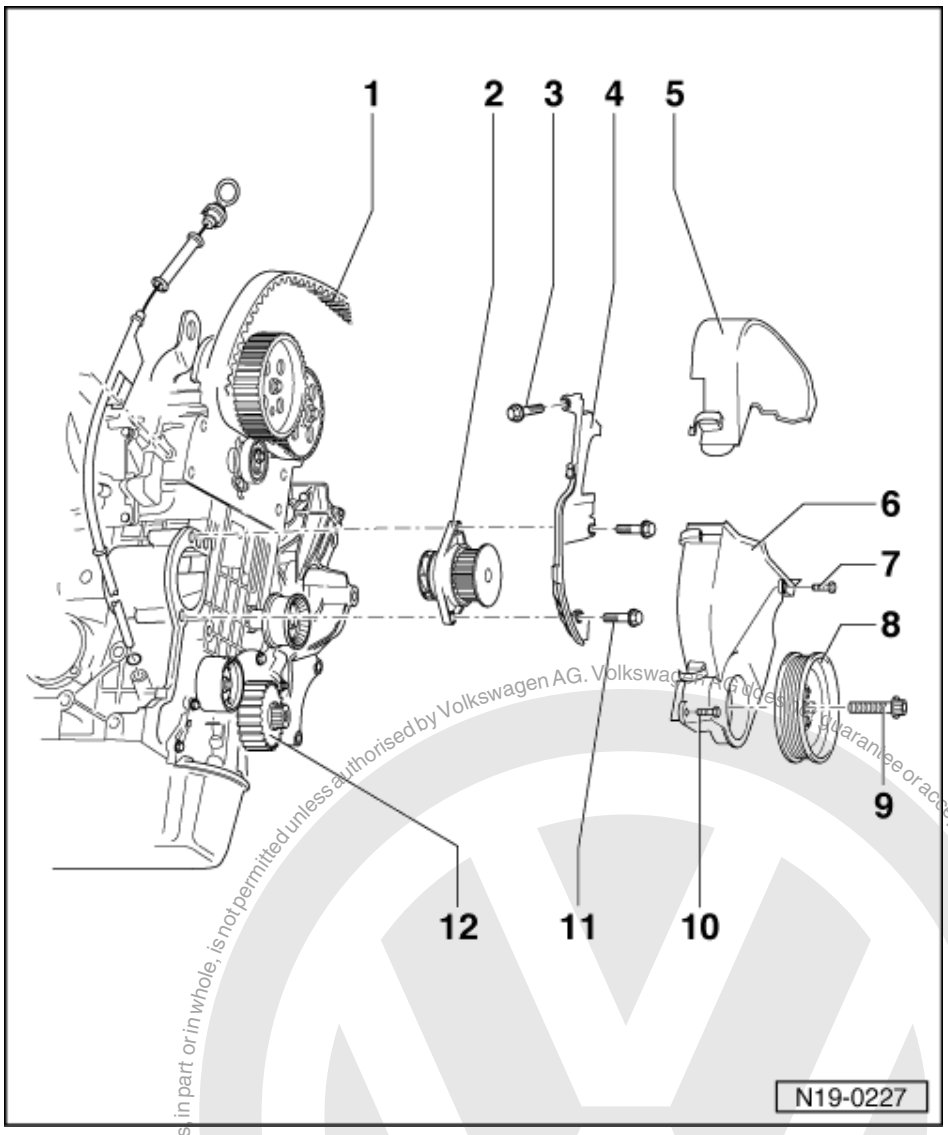

7 10 Nm
8 Belt pulley
- When installing note fixing arrangement
- Removing and installing ribbed belt => Page 22

9 90 Nm + 1/4 turn (90 °) further
- Renew
- Oil threads
- The turning further can be done in several stages
- The turning further angle can be checked with a commercial protractor e.g. Hazet 6690

10 10 Nm
11 20 Nm
12 Crankshaft toothed belt sprocket

Protected by copyright. Copying for private or commercial purposes, in part or in whole, is not permitted unless authorised by Volkswagen AG. Volkswagen AG does not guarantee or accept any liability with respect to the correctness of information in this document. Copyright by Volkswagen AG.
satelettronica

1.4 - Coolant hose connection diagram

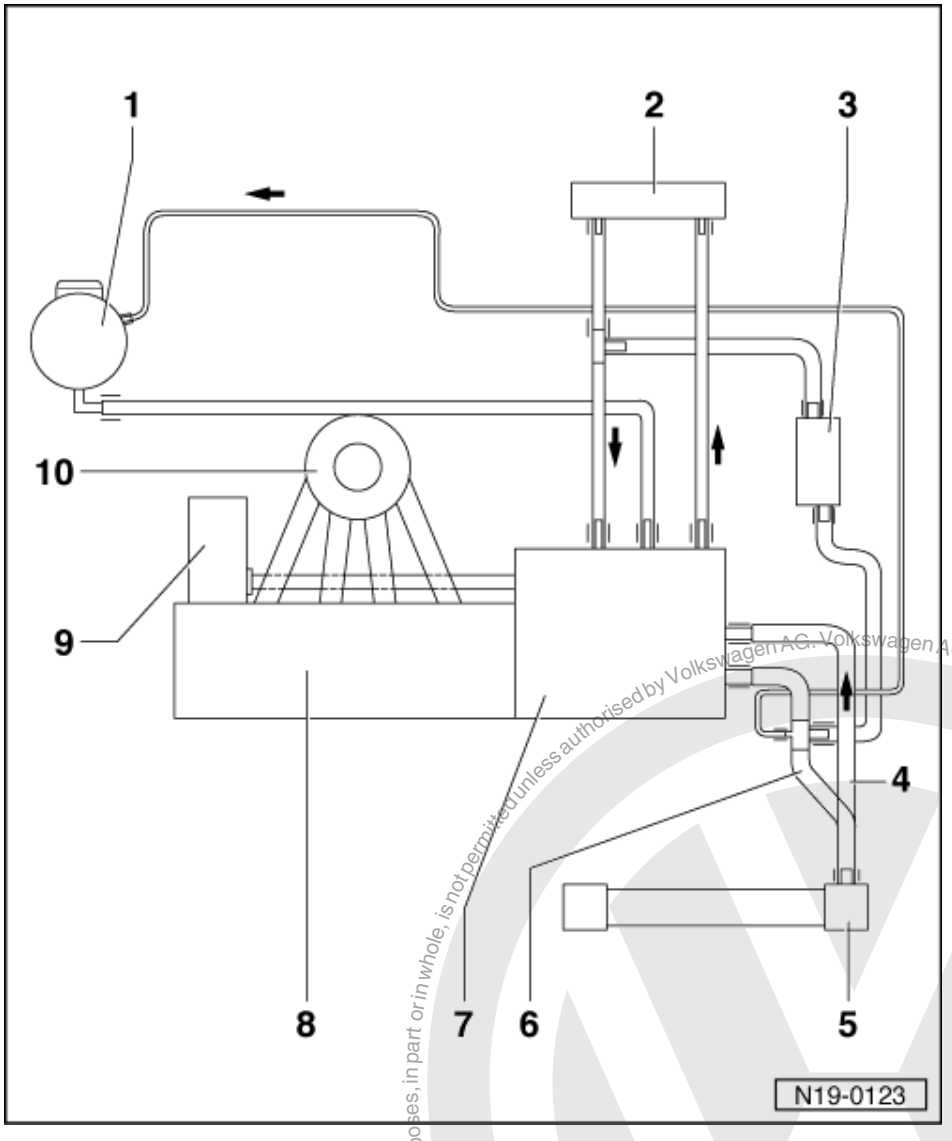

(Also valid for vehicles with automatic gearbox)

1 Expansion tank
2 Heating system heat exchanger
3 Gearbox oil cooler
4 Lower coolant hose
5 Radiator
6 Upper coolant hose

Protected by copyright. Copying for private or commercial purposes, in part or in whole, is not permitted unless authorised by Volkswagen AG. Volkswagen AG does not guarantee or accept any liability with respect to the correctness of information in this document. Copyright by Volkswagen AG.
satelettronica

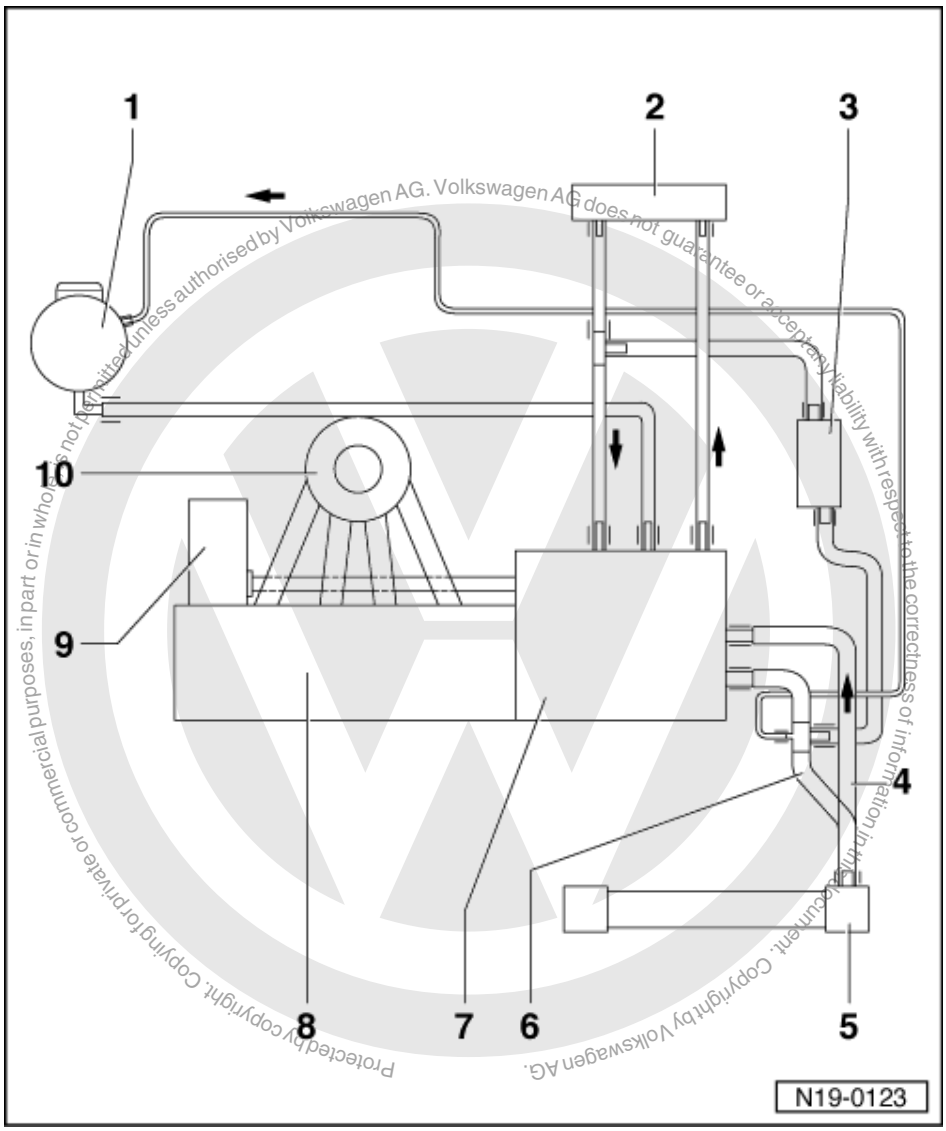

Protected by copyright. Copyright by Volkswagen AG.
Volkswagen AG does not guarantee or accept any liability with respect to the correctness of information in this document. Copyright by Volkswagen AG.
This document is not to be reproduced or made available to third parties in whole or in part for commercial purposes, in part or in whole, unless authorised by Volkswagen AG.

7 Thermostat housing
8 Cylinder block
9 Coolant pump
10 Intake manifold

satelettronica

1.5 - Draining and filling cooling system

Protected by copyright. Copying for private or commercial purposes, in part or in whole, is not permitted unless authorised by Volkswagen AG. Volkswagen AG does not guarantee or accept any liability with respect to the correctness of information in this document. Copyright by Volkswagen AG.

Special tools, workshop equipment, testers, measuring instruments and auxiliary items required

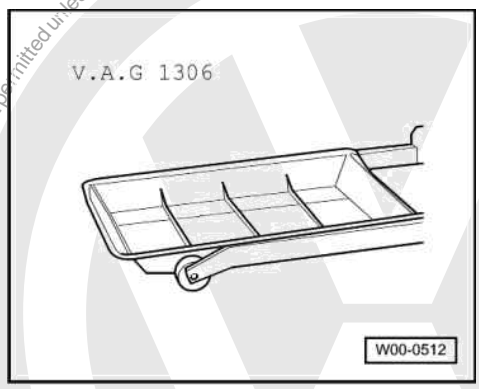

- V.A.G 1306 Drip tray

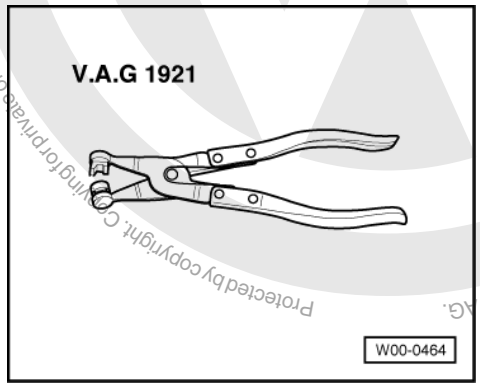

- V.A.G 1921 Pliers for spring-type clips
- Anti-freeze tester

Draining

- Remove engine cover.

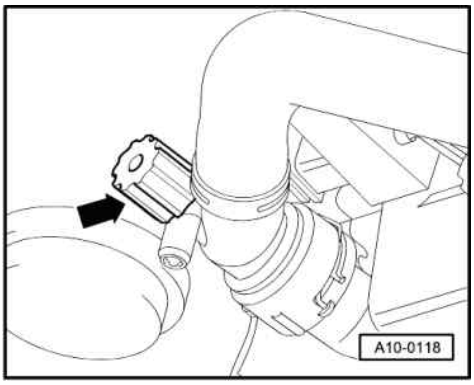

- Remove cap from coolant expansion tank.
- Remove centre insulation tray:

=> General body repairs; Repair group 50; Body front; Assembly overview Body front Assembly overview

- -> To drain coolant from radiator remove drain plug -arrow-.

satelettronica

Note:

Observe disposal regulations!

Filling

Notes:

- Only use coolant additive G 12 in accordance with TL VW 774 F.
  Distinguishing feature: coloured violet

- G 12 violet (in accordance with TL VW 774 F) can be mixed with the previous coolant additive G 12 red!
- G 12 and coolant additives marked "In accordance with TL VW 774 F" prevent frost and corrosion damage, scaling and also raise boiling point of coolant. For this reason the system must be filled all year round with frost and corrosion protection additives.
- Because of its high boiling point, the coolant improves engine reliability under heavy loads, particularly in countries with tropical climates.
- Protection against frost must be assured to about -25 °C (in arctic climatic countries to about -35 °C).
- The coolant concentration must not be reduced by adding water even in warmer seasons and in warmer countries. The anti-freeze ratio must be at least 40 %.
- If for climatic reasons a greater frost protection is required, the amount of G 12 can be increased, but only up to 60 % (frost protection to about -40 °C), as otherwise frost protection is reduced again and cooling effectiveness is also reduced.
- If radiator, heat exchanger, cylinder head or cylinder head gasket is replaced, do not reuse old coolant.

Recommended mixture ratios:

Frost pro- tection to	Anti-freeze amount	G 121)	Water1)
-25 °C	40 %	2.4 ltr.	3.6 ltr.
-35 °C	50 %	3.0 ltr.	3.0 ltr.

1) The quantity of coolant can vary depending upon the vehicle equipment.

- Screw drain plug into radiator.

With cooling system charging unit VAS 6096

- Fill coolant circuit using cooling system charging unit VAS 6096.

=> Operating instructions for cooling system charging unit VAS 6096

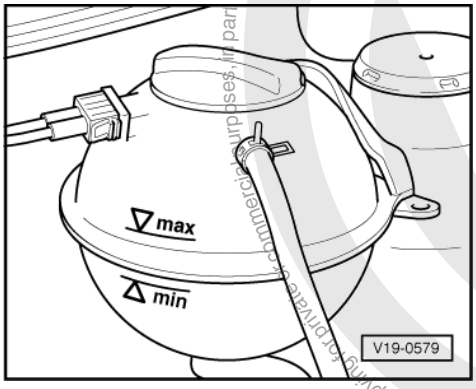

Not using cooling system charging unit VAS 6096

- -> Fill with coolant up to max. mark on expansion tank.

With and without cooling system charging unit VAS 6096

- Fit expansion tank cap.

satelettronica

- Run engine until radiator fan cuts-in.
- Check coolant level and replenish as necessary. When the engine is at normal operating temperature, the coolant level must be on the max. mark, when the engine is cold, between the min. and max. marks.

1.6 - Removing and installing radiator

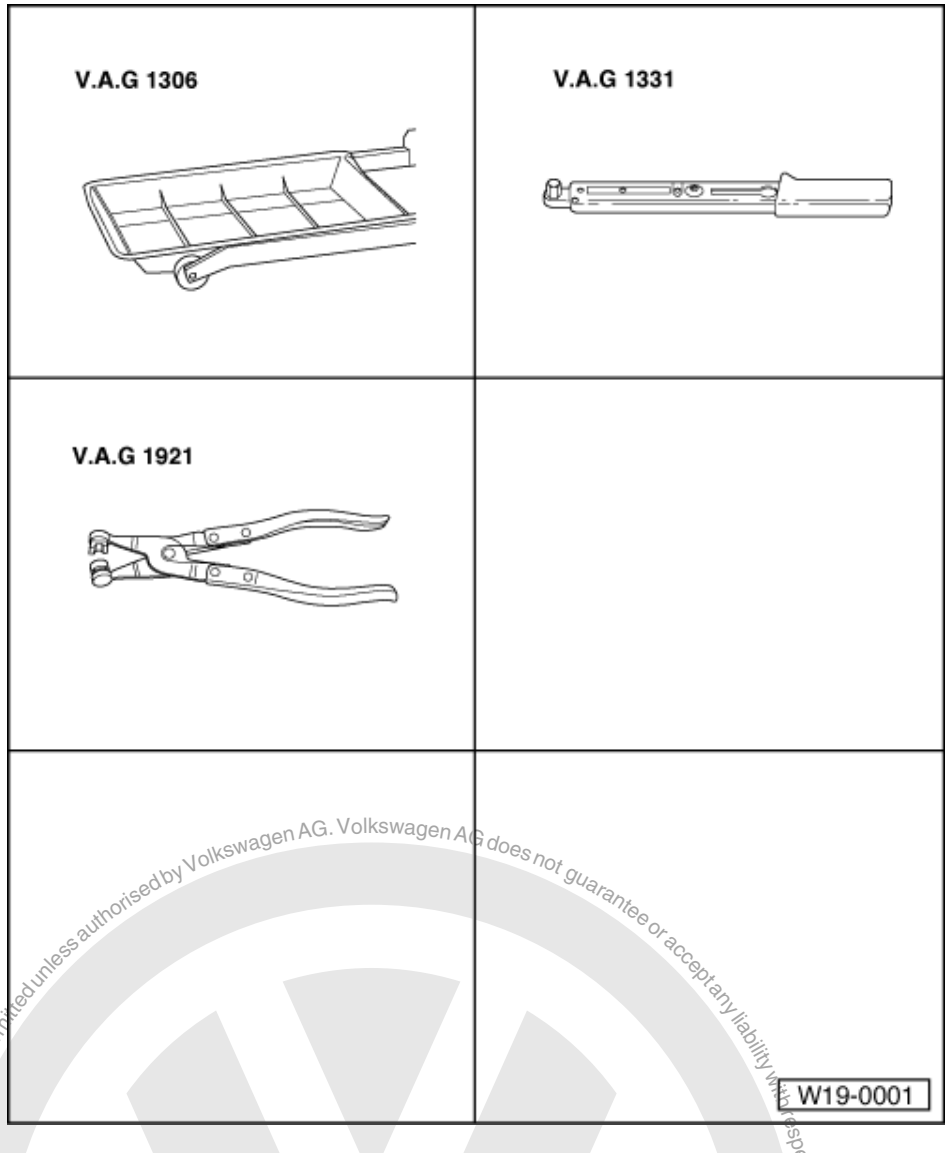

Special tools, workshop equipment, test and measuring appliances and auxiliary items required

- V.A.G 1306 Drip tray
- V.A.G 1331 Torque wrench (5...50 Nm)
- V.A.G 1921 Spring-type clip pliers
- Anti-freeze tester

Removing

- Drain coolant => Page 115 .
- Removing front bumper:

=> General body repairs, Repair group 63; Front bumper, removing and installing front bumper

Protected by copyright. Copying for private or commercial purposes, in part or in whole, is not permitted unless authorised by Volkswagen AG. Volkswagen AG does not guarantee or accept any liability with respect to the correctness of information in this document. Copyright by Volkswagen AG.
satelettronica

- Pull coolant hoses off radiator.
- Pull connectors off thermo-switch.
- Bring lock carrier into service position:

=> General body repairs; Repair group 50; Body front; lock carrier service position Body front lock carrier service position

- Remove radiator securing bolts and take radiator with fan out downwards.

Vehicles with air conditioning system:

- Observe additional information and removal work => Page 118 .

Installing

Installation is carried out in the reverse order, when doing this note the following:

- Filling with coolant => Page 115

Additional information and removal work on vehicles with air conditioner

Warning! The air conditioning system refrigerant circuit must not be opened.

Note:

To prevent damage to condenser and also to the refrigerant lines/hoses, ensure that the pipes and hoses are not stretched, kinked or bent.

- Remove retaining clamp(s) from refrigerant pipes.
- Unbolt condenser from radiator and secure to lock carrier.

Protected by copyright. Copyright by Volkswagen AG. Volkswagen AG does not guarantee or accept any liability with respect to the correctness of information in this document. Copyright by Volkswagen AG. Copying for private or commercial purposes, in part or in whole, is not permitted unless authorised by Volkswagen AG.
satelettronica

1.7 - Removing and installing coolant pump

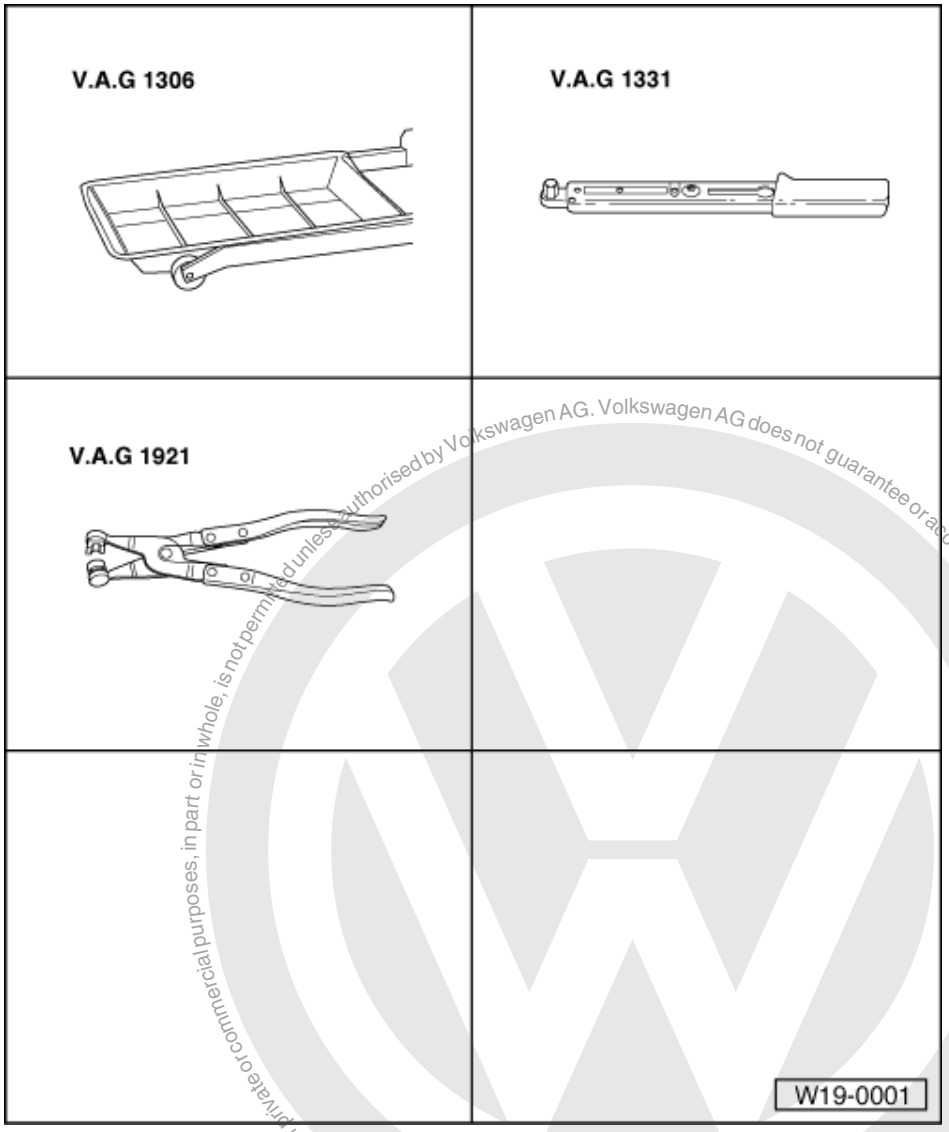

Protected by copyright. Copying for private or commercial purposes, in part or in whole, is not permitted unless authorised by Volkswagen AG. Volkswagen AG does not guarantee or accept any liability with respect to the correctness of information in this document. Copyright by Volkswagen AG.

satelettronica

Special tools, workshop equipment, test and measuring appliances and auxiliary items required

- V.A.G 1306 Drip tray
- V.A.G 1331 Torque wrench (5...50 Nm)
- V.A.G 1921 Spring-type clip pliers
- Anti-freeze tester

Notes:

- The coolant pump may have a silicon sealing ring fitted. If damaged or leaking renew pump complete.
- The lower part of the toothed belt guard must be removed.
- The main drive toothed belt must be removed.
- Cover toothed belt with a cloth to protect it from coolant before removing coolant pump.

Removing

- Drain coolant => Page 115
- First remove main drive toothed belt => Page 25 .

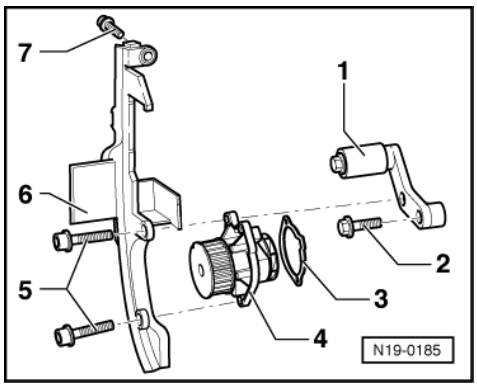

- -> Remove idler roller -1-, to do this remove idler roller securing bolt -2-.
- Unscrew coolant pump securing bolts -5- and remove coolant pump -4-.

Installing

Installation is carried out in the reverse order, when doing this note the following:

- Fit new gasket -3-.
- Insert coolant pump -4- into cylinder block and tighten securing bolts -5-.
  Tightening torque: 20 Nm
- Install idler roller -1- and tighten securing bolt -2-.
  Tightening torque: 25 Nm
- Install toothed belt and tension => Page 25 .
- Install ribbed belt => Page 22 .
- Filling with coolant => Page 115

Protected by copyright. Copying for private or commercial purposes, in part or in whole, is not permitted unless authorised by Volkswagen AG. Volkswagen AG does not guarantee or accept any liability with respect to the correctness of information in this document. Copyright by Volkswagen AG.

satelettronica

20 - Fuel supply system

1 - Removing and installing parts of fuel supply system

1.1 - Removing and installing parts of fuel supply system

Notes:

- Hose connections are secured with either spring-type or clamp-type clips.
- Always replace clamp-type clips with spring-type clips.
- Fuel hoses in engine compartment must only be secured with spring-type clips. The use of clamp or screw-type clips is not permissible.
- V.A.G 1921 pliers are recommended when installing spring-type clips.

Observe safety precautions=> Page 127 .

Observe rules for cleanliness => Page 127 .

Removing and installing fuel tank with attachments and fuel filter => Page 122 .

Servicing accelerator mechanism => Page 137

Adjusting throttle cable => Page 138

Removing and installing parts of the activated charcoal filter system => Page 139 .

Protected by copyright. Copying for private or commercial purposes, in part or in whole, is not permitted unless authorised by Volkswagen AG. Volkswagen AG does not guarantee or accept any liability with respect to the correctness of information in this document. Copyright by Volkswagen AG.

satelettronica

1.2 - Removing and installing fuel tank with its attachments and fuel filter

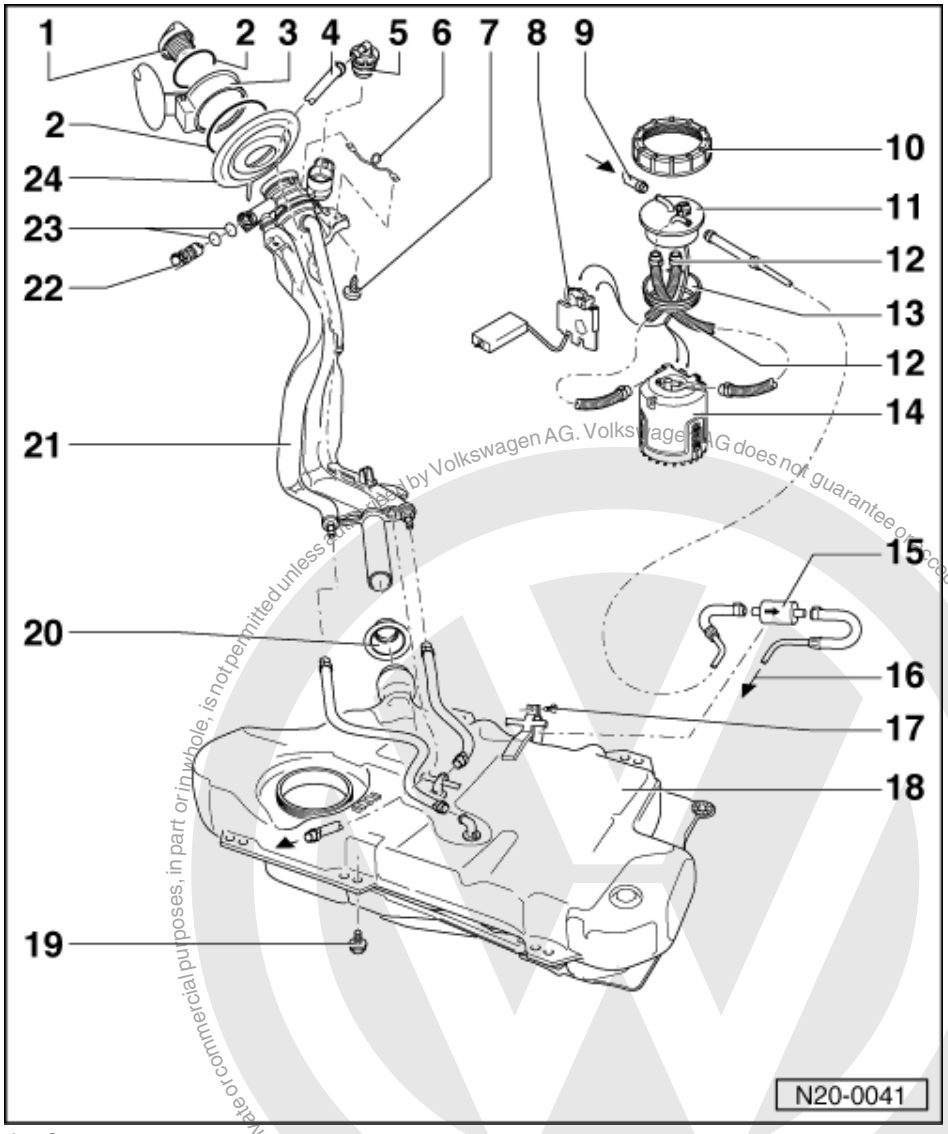

1 Cap
2 Retaining ring
3 Tank flap unit
- Removing and installing

=> General body repairs; Repair group 55; fuel flap unit fuel flap unit

4 Vent pipe
- To activated charcoal filter
  =>Page 140 , Item 3

5 Gravity/overflow valve
- To remove, release locking lug and unclip valve upwards out of filler neck
- Check valve for through-flow
  valve vertical: open,
  valve tilted 90 °: closed

satelettronica

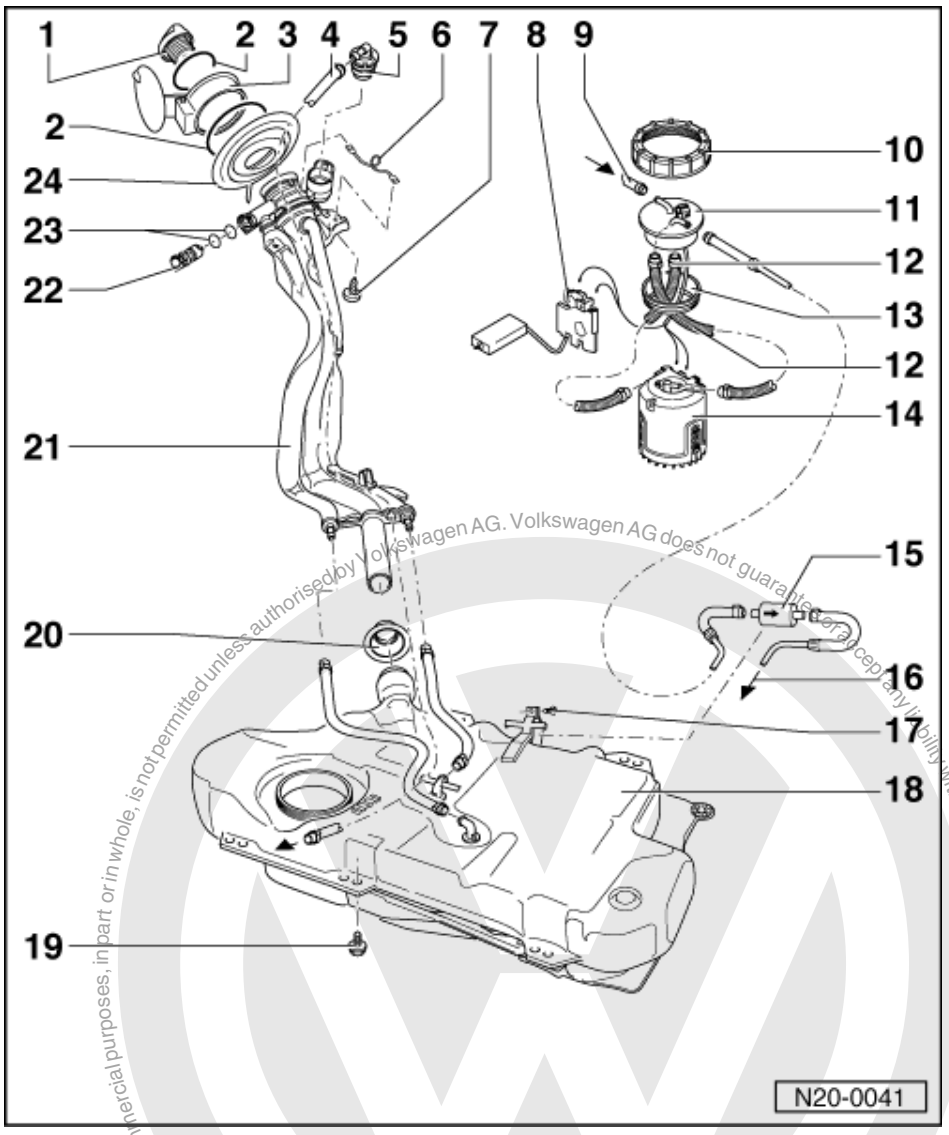

6 Earth connection
7 4 Nm
8 Fuel gauge sender
- Adjusting:

=> Current flow diagrams, Electrical fault finding and Fitting locations

9 Return hose/line
- Blue or with blue marking
- From fuel manifold

=> Repair group 24; mixture preparation, injection mixture preparation, injection

10 Union nut, 75 Nm
- Remove and install with 3217

11 Flange
- Note installation position on fuel tank => Fig. 1

12 Corrugated tube
- Must not contact fuel tank, otherwise pump noises will be transferred

Protected by copyright. Copying for private or commercial purposes, in part or in whole, is not permitted unless authorised by Volkswagen AG. Volkswagen AG does not guarantee or accept any liability with respect to the correctness of information in this document. Copyright by Volkswagen AG.
satelettronica

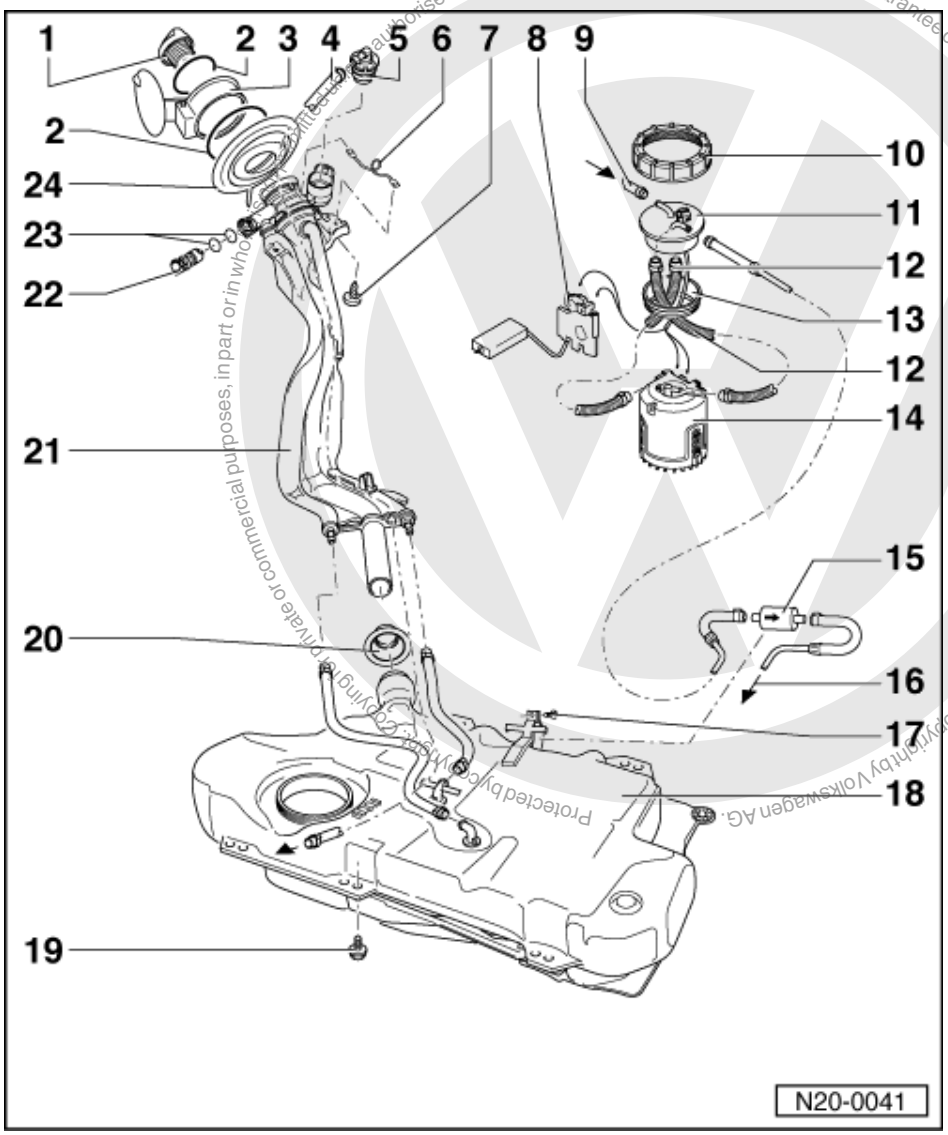

13 Sealing ring

- Coat with fuel when installing
- Renew if damaged

14 Fuel delivery unit

- Removing and installing
  => Page 128
- Checking fuel pump
  => Page 130

Note:

After completing work on fuel delivery unit or fuel gauge sender ensure that the corrugated tubing between delivery unit and flange does not contact the fuel tank (transfer of pump noises).

15 Fuel filter

- Fitting position: Arrow points in direction of flow

satelettronica

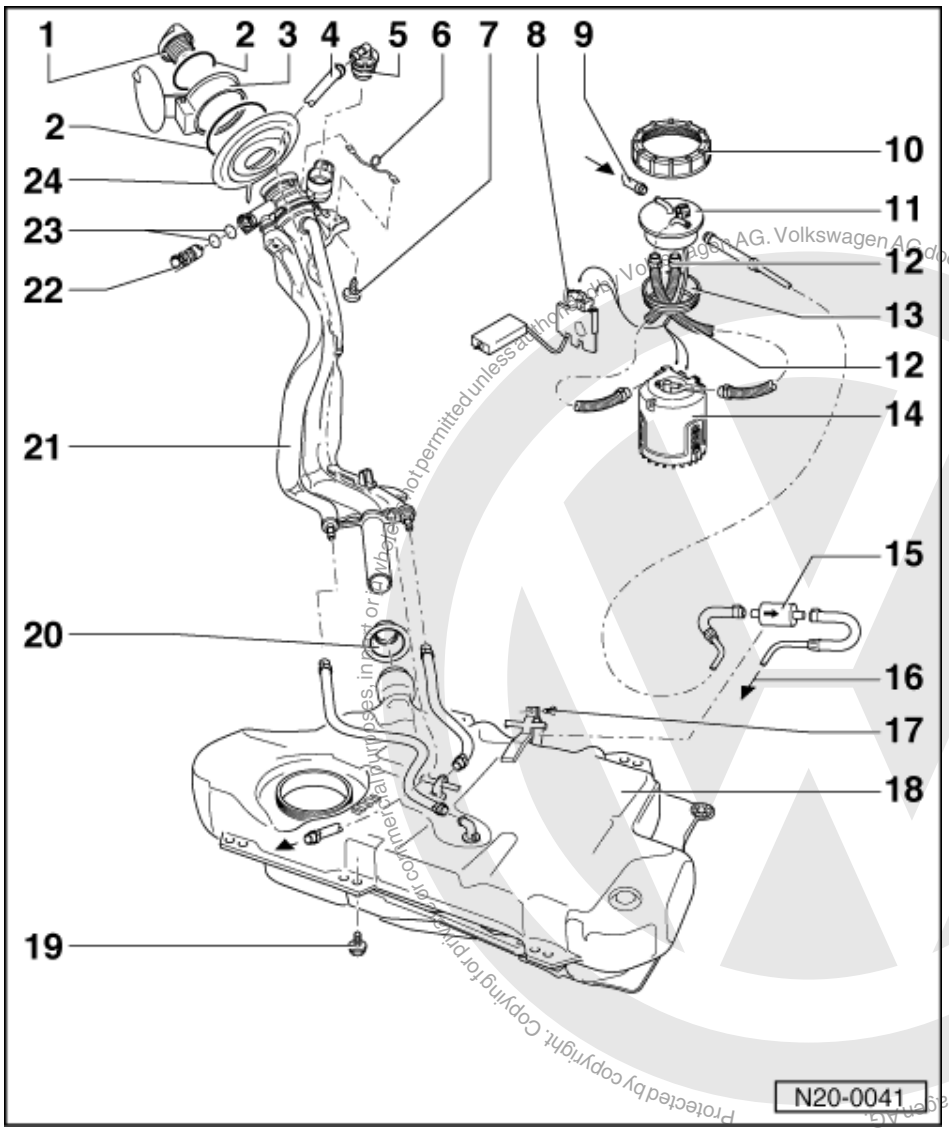

16 Supply pipe
- Black
- To fuel manifold

=> Repair group 24; mixture preparation, injection mixture preparation, injection

17 3 Nm

18 Fuel tank
- Removing and installing
  => Page 129
- Press clamping washer from heat shield tightly onto pins on vehicle floor

19 25 Nm

20 Sealing boot
- After installing filler pipes fit over fuel tank connections, having turned boot inside out

21 Filler pipes
- With non-return valve

Protected by copyright. Copying for private or commercial purposes, in part or in whole, is not permitted unless authorised by Volkswagen AG. Volkswagen AG does not guarantee or accept any liability with respect to the correctness of information in this document. Copyright by Volkswagen AG.
satelettronica

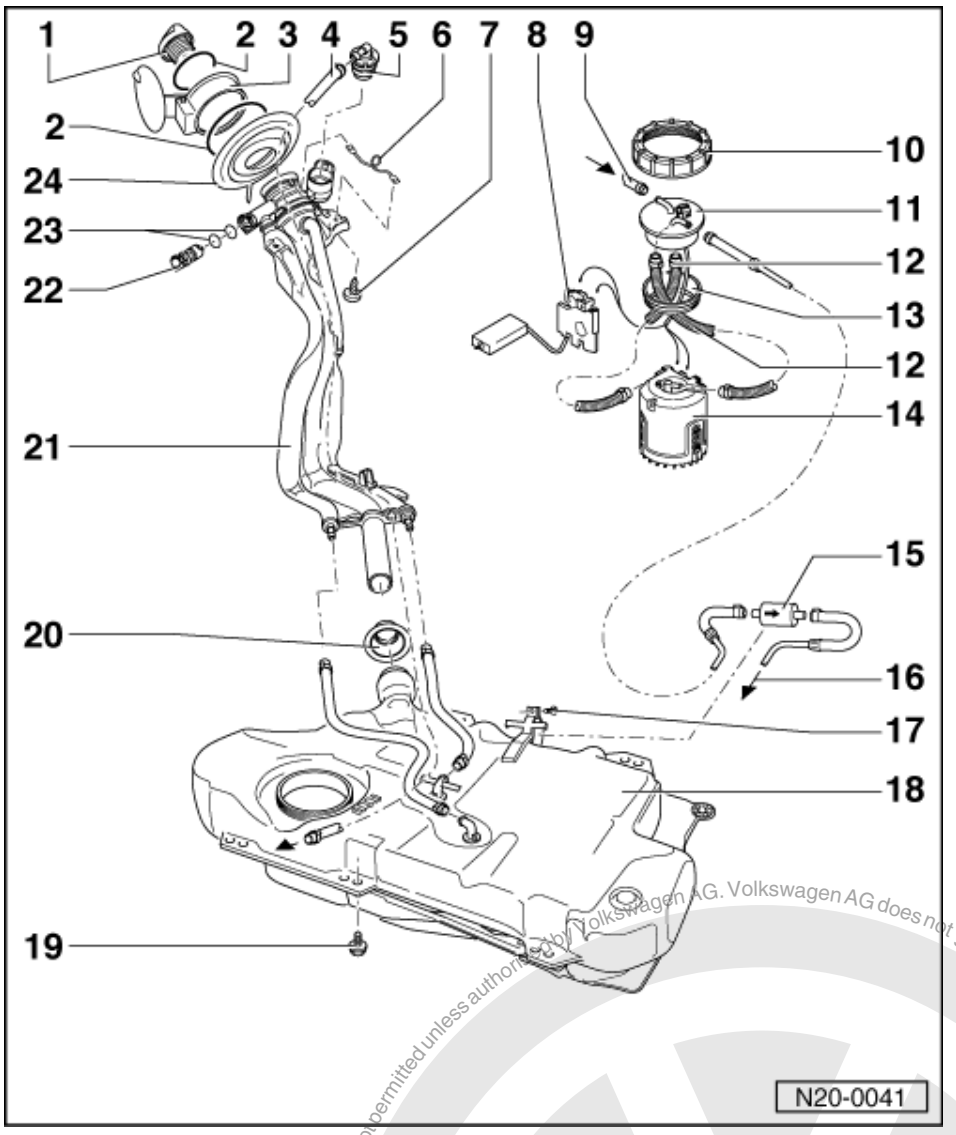

22 Vent valve

- Checking =>Fig.
- To remove pull locking latch lightly to inside -arrow- and pull valve out

23 O-ring

- Renew if damaged

24 Cup

- For filler pipes

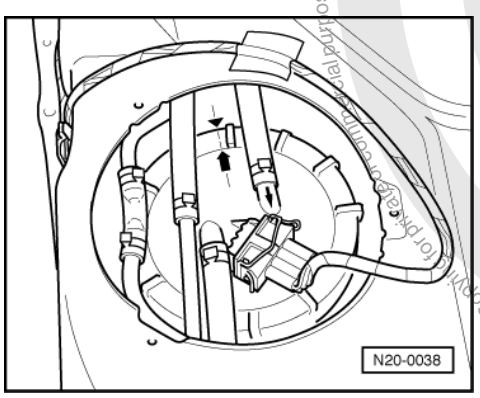

Protected by copyright. Copying for private or commercial purposes, in part or in whole, is not permitted unless authorised by Volkswagen AG. Volkswagen AG does not guarantee or accept any liability with respect to the correctness of information in this document. Copyright by Volkswagen AG.
satelettronica

-> Fig. 1 Installation position of fuel delivery unit flange

Marking on the flange must align with marking on the fuel tank.

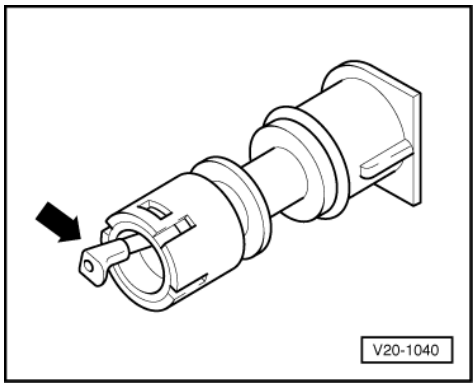

-> Fig. 2 Checking vent valve

Lever in rest position: Closed

Lever pushed in direction of arrow: Open

1.3 - Safety precautions when working on the fuel supply system

Warning!
Fuel supply lines are under pressure! Before removing from hose connection wrap a cloth around the connection. Then release pressure by carefully pulling hose off connection.

When removing and installing the fuel gauge sender or fuel pump (fuel delivery unit) from a full or partly full fuel tank the following must be observed:

- Before commencing work, switch on exhaust extraction system and place an extraction hose close to the sender opening in the fuel tank to extract escaping fuel fumes.
  If no exhaust extraction system is available, a radial fan (as long as motor is not in air flow) with a displacement greater than 15 m3/h can be used.
- Prevent skin contact with fuel! Wear fuel-resistant gloves!

1.4 - Rules for cleanliness

When working on the fuel supply/injection system, pay careful attention to the following "5 rules":

- Thoroughly clean all unions and the adjacent areas before disconnecting.
- Place parts that have been removed on a clean surface and cover. Do not use fluffy cloths!
- Carefully cover opened components or seal, if the repair cannot be carried out immediately.
- Only install clean components:
  Only unpack replacement parts immediately prior to installation.
  Do not use parts that have been stored loose (e.g. in tool boxes etc.).
- When the system is open:
  Do not work with compressed air if this can be avoided.
  Do not move vehicle unless absolutely necessary.

Protected by copyright. Copyright by Volkswagen AG. Volkswagen AG does not guarantee or accept any liability with respect to the correctness of information in this document. Copyright by Volkswagen AG. Reproduction, in part or whole, is not permitted unless authorized by Volkswagen AG.
satelettronica

1.5 - Removing and installing fuel delivery unit

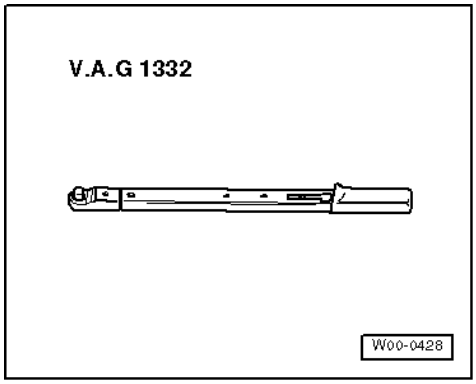

Special tools, workshop equipment, testers, measuring instruments and auxiliary items required

- V.A.G 1332 Torque wrench (40...200 Nm)

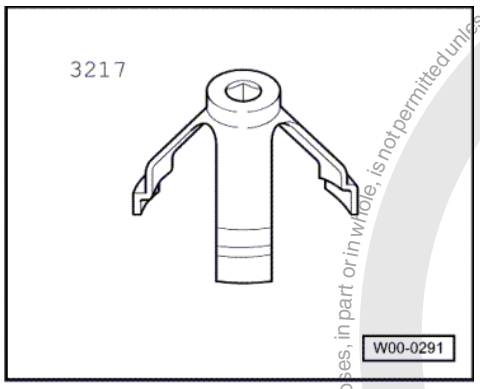

- 3217 Ring nut spanner

Removing

- First check whether a coded radio is fitted. If this is the case obtain the anti-theft coding.
- Note safety precautions before starting work => Page 127

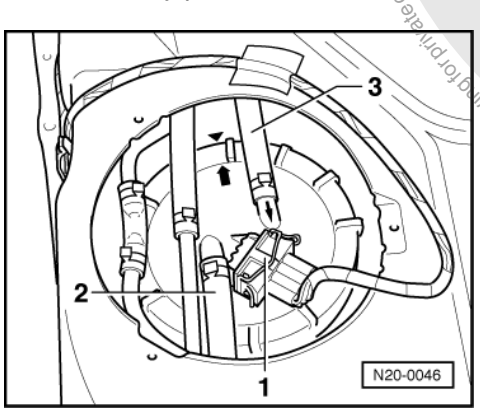

- With ignition switched off disconnect battery earth strap.
- Fold rear seat forwards.
- Remove cover in luggage boot floor.
- -> Pull connector -1- and supply and return pipes -2, 3- off flange.
- Remove union nut from flange with 3217.
- Pull flange and seal out of the opening in fuel tank.
- Release delivery unit from bayonet connection by turning to left and remove from fuel tank.

Protected by copyright. Copying for private or commercial purposes, in part or in whole, is not permitted unless authorised by Volkswagen AG. Volkswagen AG does not guarantee or accept any liability with respect to the correctness of information in this document. Copyright by Volkswagen AG.
satelettronica

Note:

If the delivery unit is to be renewed then drain old delivery unit before disposal.

Installing

- Installation of the fuel delivery unit is carried out in the reverse order.

Notes:

- Coat flange seal with fuel when fitting.
- When inserting the fuel delivery unit ensure that the fuel gauge sender is not bent.
- When the fuel delivery unit is correctly installed the fuel gauge sender float points to fuel filler pipes.
- Installation position of fuel delivery unit flange => Page 127 , Fig..

1.6 - Removing and installing fuel tank

Removing

- First check whether a coded radio is fitted. If this is the case obtain the anti-theft coding.
- With ignition switched off disconnect battery earth strap.
- Fold rear seat forwards.
- Remove cover in luggage boot floor.

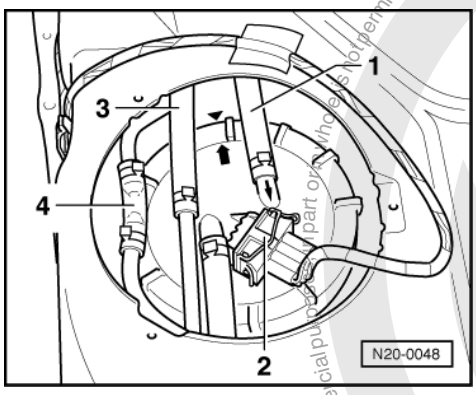

- -> Pull fuel return hose -1- and connector -2- off flange.
- Disconnect fuel supply pipe -3- and breather pipe -4- at hose connections.
- Drain fuel tank.

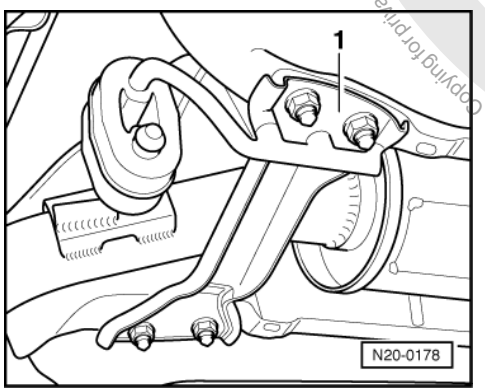

- -> Remove support bracket -1- from body.
- Remove all rear exhaust system mountings from body. Then lower the exhaust system slightly and secure to body with wire.
- Remove rear right wheel.
- Detach filler pipe from body.
- Take filler cap off filler neck and detach filler neck from cup.
- Remove filler neck.

Protected by copyright. Copying for private or commercial purposes, in part or whole, is not permitted unless authorised by Volkswagen AG. Volkswagen AG does not guarantee or accept any liability with respect to the correctness of information in this document. Copyright by Volkswagen AG.
satelettronica

- Now the fuel tank can be detached from body and removed together with the heat shield.

Installing

Installing is basically in the reverse order but note following:

- Breather and fuel hoses are to be installed kink-free.
- Secure fuel hoses with screw-type clamps.
- Do not interchange supply and return hose (return hose blue or blue markings, supply hose black).

1.7 - Checking fuel pump

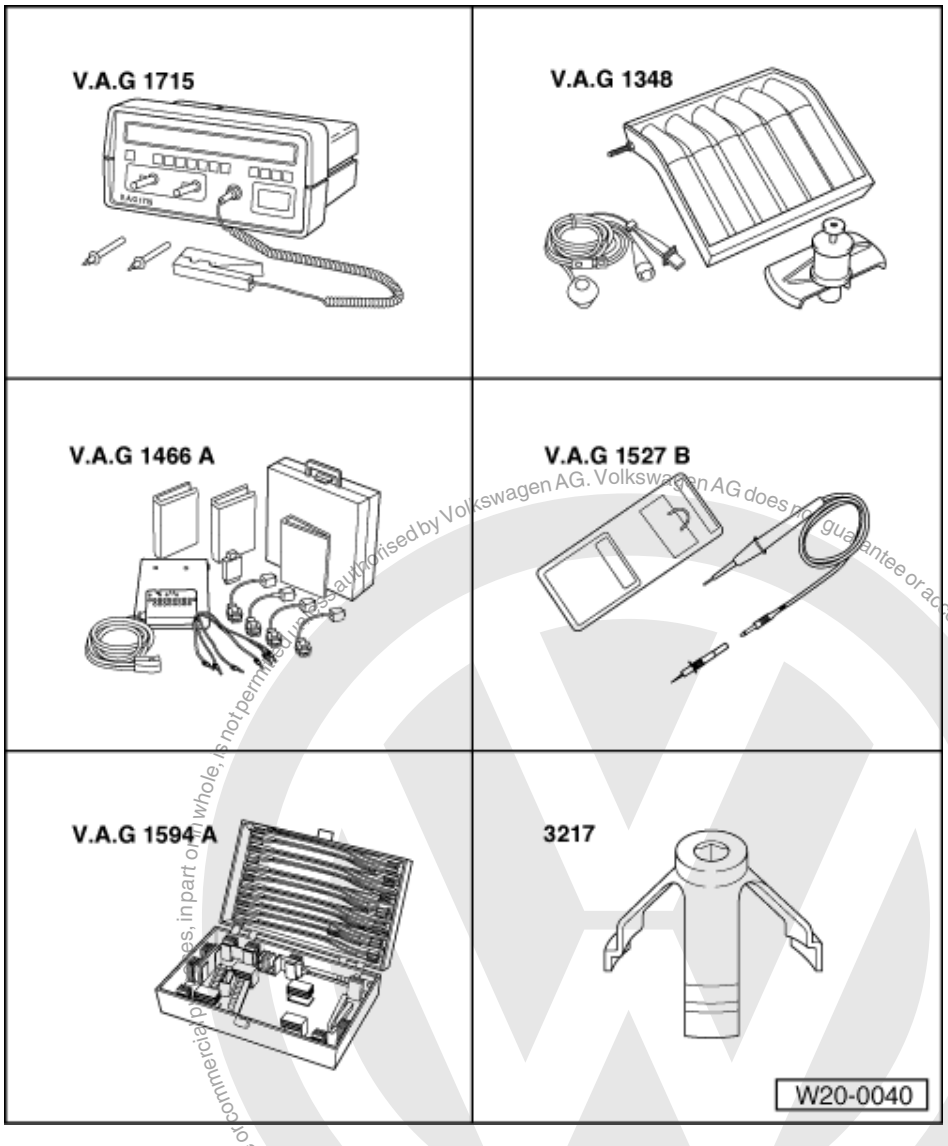

Special tools, workshop equipment, test and measuring appliances and auxiliary items required

- V.A.G 1715 Multimeter
- V.A.G 1348/3A Remote control with V.A.G 1348/3-2 adapter cable
- V.A.G 1466 Test system
- V.A.G 1527 B Diode test lamp
- V.A.G 1594 A Adapter set

Protected by copyright. Copyright by Volkswagen AG. Volkswagen AG does not guarantee or accept any liability with respect to the correctness of information in this document. Copyright by Volkswagen AG. Reproduction, in whole or in part, is not permitted unless authorised by Volkswagen AG. Volkswagen AG does not guarantee or accept any liability with respect to the correctness of information in this document. Copyright by Volkswagen AG.
satelettronica

- 3217 Union nut spanner

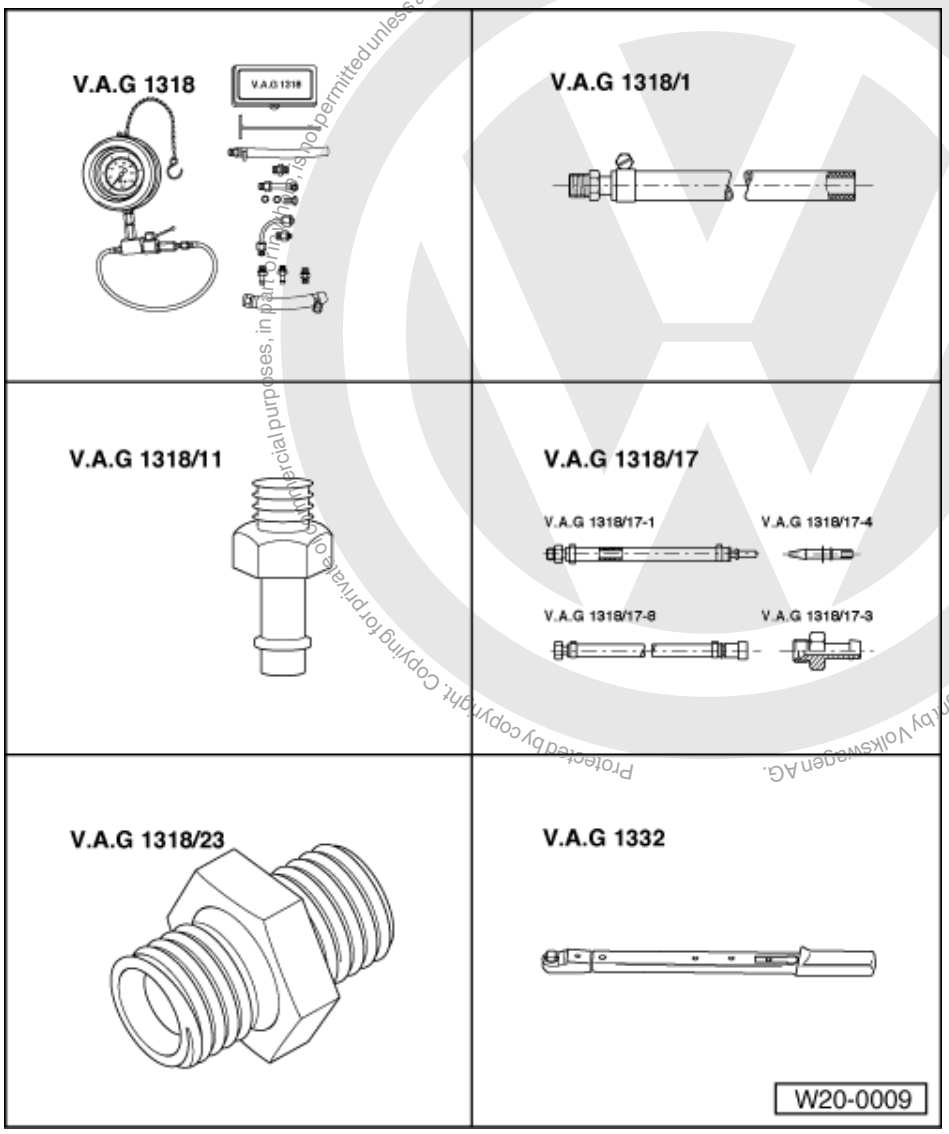

- V.A.G 1318 Pressure tester
- V.A.G 1318/1 Adapter
- V.A.G 1318/11 Adapter
- V.A.G1318/17 Adapter
- V.A.G 1318/23 Adapter
- V.A.G 1332 (40...200 Nm) Torque wrench
- Measuring container
- Current flow diagram

Protected by copyright. Copying for private or commercial purposes, in part or in whole, is not permitted unless authorised by Volkswagen AG. Volkswagen AG does not guarantee or accept any liability with respect to the correctness of information in this document. Copyright by Volkswagen AG.
satelettronica

Check conditions

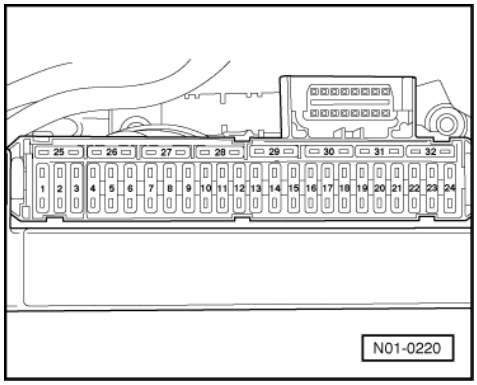

- Battery voltage at least 11.5 V
- -> Fuse No. 32 OK.

Checking function and voltage supply

- Remove cover from fuel delivery unit.
- Briefly operate starter. Fuel pump must be heard to run.
- Switch off ignition.

If the fuel pump does not run:

- Remove cover in front of fuse holder.
- Pull fuse No. 32 out of fuse holder.
- Connect remote control V.A.G 1348/3A with adapter cable V.A.G 1348/3-2 to contact 32a to fuel pump and battery positive (+).
- Operate remote control.

Fuel pump runs:

- Check activation of fuel pump relay using current flow diagram:

=> Current flow diagrams, Electrical fault finding and Fitting locations

Fuel pump does not run:

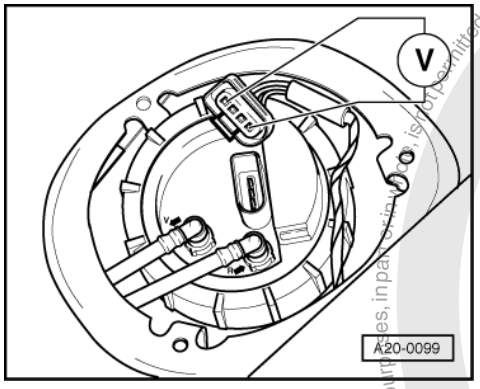

- Pull 4-pin connector off flange on fuel delivery unit.
- -> Connect diode test lamp V.A.G 1527 with aux. cables from V.A.G 1594 to the outer contacts of the connector.
- Operate remote control.
  LED must light up

LED does not light up:

- Locate and eliminate open circuit using current flow diagram:

Protected by copyright. Copying for private or commercial purposes, in part or in whole, is not permitted unless authorised by Volkswagen AG. Volkswagen AG does not guarantee or accept any liability with respect to the correctness of information in this document. Copyright by Volkswagen AG.
satelettronica

=> Current flow diagrams, Electrical fault finding and Fitting locations

LED lights up (voltage supply OK.):

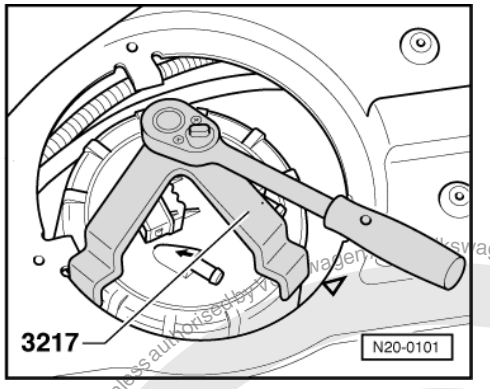

- -> Remove union nut with spanner 3217.
- Check that the electrical wires between flange and fuel pump are connected.

If no open circuit can be found:

- Fuel pump defective, renew fuel delivery unit =>Page 128 , Removing and installing fuel delivery unit.

Checking delivery rate

Check conditions

- Voltage supply OK.
- Remote control V.A.G 1348/3A connected.

Test sequence

- Remove filler cap from fuel tank filler neck.

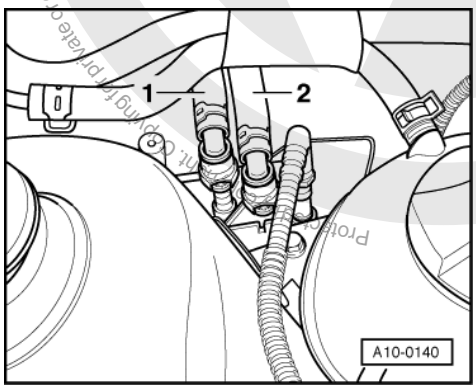

- -> Pull off supply pipe/hose -1- (with white marking) and collect fuel that leaks out with a cloth.

Warning!
Fuel system is under pressure! Before opening the system place a cloth around the connection. Then release pressure by carefully loosening the connection.

satelettronica

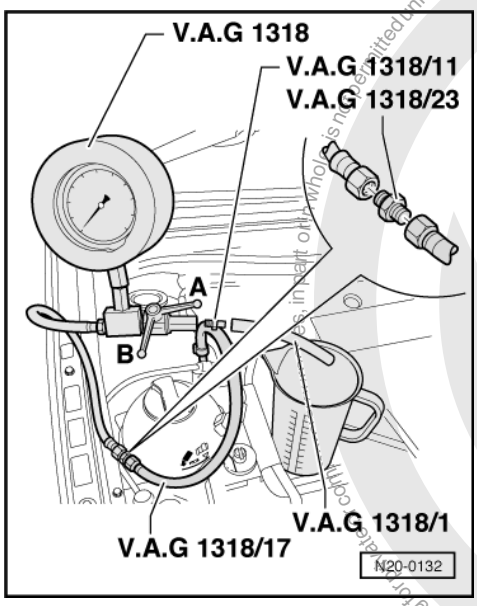

- -> Connect pressure gauge V.A.G 1318 with adapter 1318/23 and V.A.G 1318/17 to the fuel supply pipe.
- Push the hose V.A.G 1318/1 onto the adapter V.A.G 1318/11 on the pressure gauge and hold hose in a measuring container.
- Open the pressure gauge shut-off tap. The lever then points in the direction of flow -A-.
- Operate remote control V.A.G 1348/3A and slowly close cut-off tap, until pressure gauge shows
  3 bar.
  From this point on do not move position of cut-off tap.
- Empty measuring container.
- The fuel pump delivery range is dependent upon battery voltage. Therefore connect the multimeter with adapter cables from V.A.G 1594 to the vehicle battery.
- Operate remote control for
  30 seconds
  and measure battery voltage

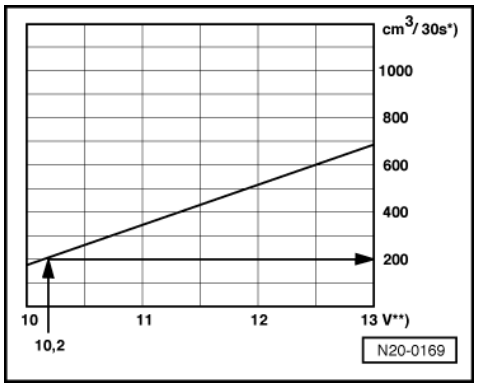

- -> Compare the quantity of fuel delivered with specification.

*) Minimum delivery cm3/30 seconds

**) Voltage at fuel pump with engine stopped and pump running (approx. 2 volts less than battery voltage).

Example:

During the test a voltage of 12.5 volts is measured at the battery. As the voltage at the pump is approx. 2 volts less than the battery voltage then this will equate to a minimum delivery of 200 cm3/30 s.

If the minimum delivery rate is not attained:

satelettronica

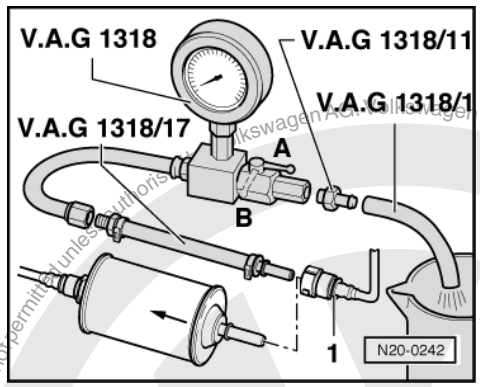

- Check the fuel pipes for possible restrictions (kinks) or blockages.
- -> Pull the supply hose off fuel filter inlet.
- Connect the pressure gauge V.A.G 1318 with adapter /17 on hose.
- Repeat delivery rate check.

If the minimum delivery rate is now attained:

- Replace the fuel filter.

If the minimum delivery rate is again not attained:

- Remove the fuel delivery unit and check the strainer filter for soiling.

Only when up to now no fault has been detected:

- Replace the fuel delivery unit.

If the delivery rate has been attained but nevertheless you suspect a fuel supply system fault (e.g. intermittent failure of fuel supply system):

- Check the current draw of the fuel pump as follows:
- Reconnect all disconnected fuel pipes.

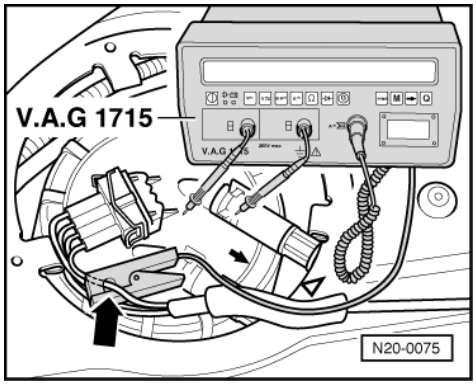

- -> Connect the multimeter V.A.G 1715 using the current clamp to the green/yellow wire of wiring harness.
- Start the engine and run at idling speed.
- Measure the current draw of the fuel pump.
  Specification: max. 8 amps.

Note:

If the fuel system malfunction is intermittent, you can perform the check during a test drive with the help of a 2nd person.

If the current draw is exceeded:

- Replace the fuel delivery unit.

Copyright by Volkswagen AG. Volkswagen AG does not guarantee or accept any liability with respect to the correctness of information in this document. Copyright by Volkswagen AG. Reproduction, in whole or in part, for commercial purposes, is not permitted unless authorised by Volkswagen AG.
satelettronica

Checking fuel pump non-return valve

Test conditions

- Remote control V.A.G 1348/3A is still connected.
- Pressure gauge V.A.G 1318 is still connected.

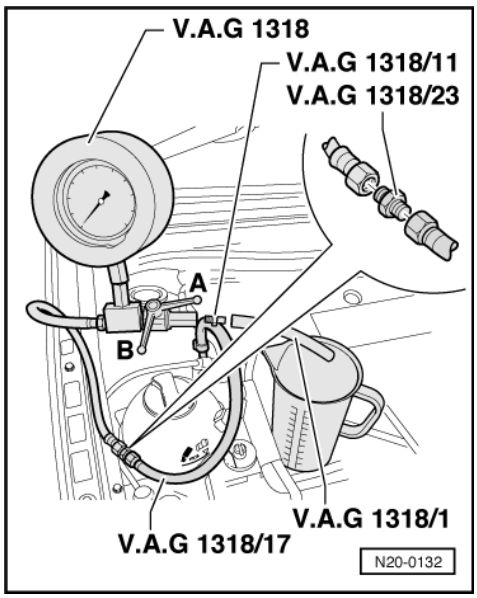

Test sequence

Note:

With this check the fuel supply pipe connections from the fuel delivery unit to the point at which the pressure gauge V.A.G 1318 is connected will be checked for leaks at the same time.

- -> Close pressure gauge cut-off tap (lever at right angles to throughflow direction).
- Separate remote control at short intervals, until a pressure of
  Approx. 3 bar
  has built up.

Warning! Danger of spray when opening the shut-offtap, hold container over the free connection of the pressure gauge.

- If pressure builds up too high, lower excess pressure by carefully opening the shut-off tap.
- Watch pressure drop on gauge. After 10 minutes the pressure must not drop below
  2.5 bar.

If the pressure drops further:

- Check pipe connections for leaks.

If no fault is detected in the wiring:

- Fuel pump defective, renew fuel delivery unit =>Page 128 , Removing and installing fuel delivery unit.

Protected by copyright. Copyright by Volkswagen AG. Copyright by Volkswagen AG. Volkswagen AG does not give any guarantee or accept any liability with respect to the correctness of information in this document. Copying for private or commercial purposes, in part or in whole, is not permitted unless authorised by Volkswagen AG.
satelettronica

2 - Accelerator mechanism

2.1 - Accelerator mechanism

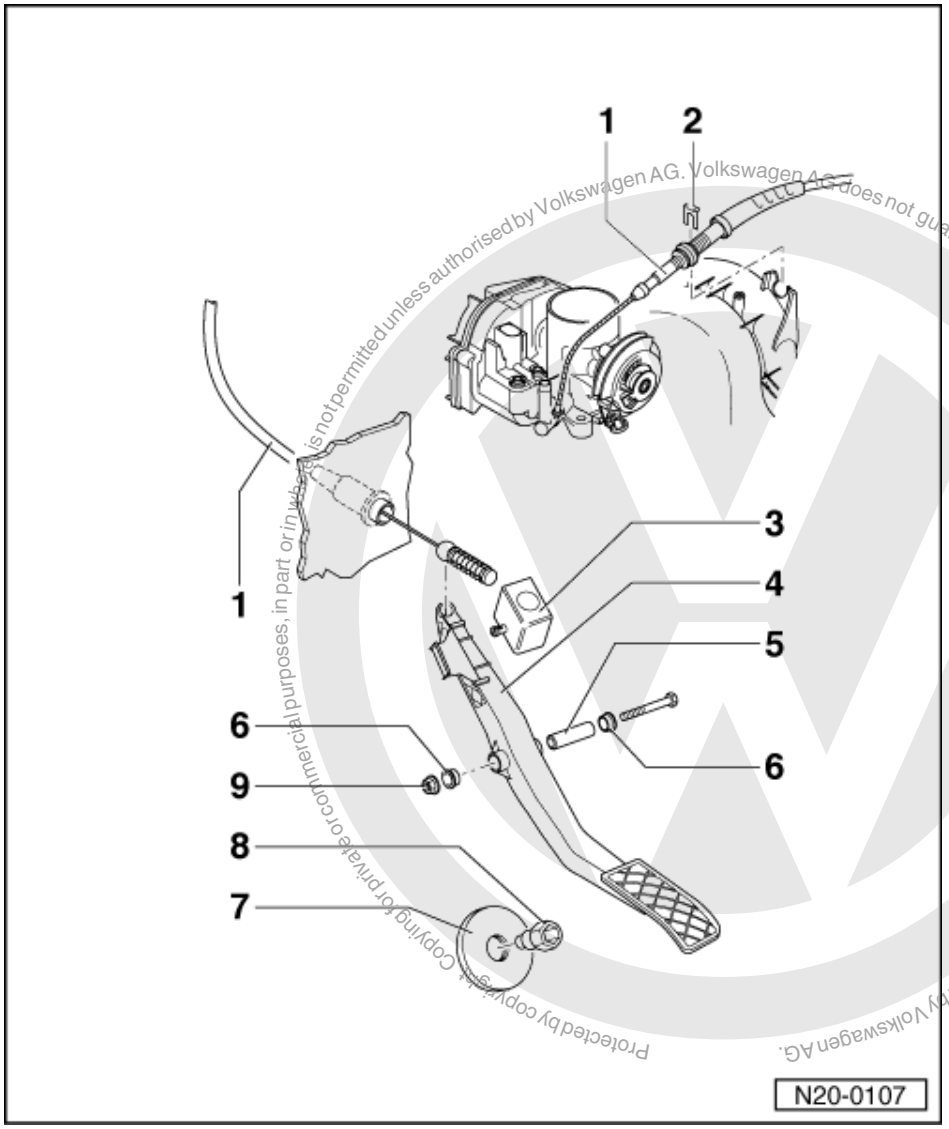

Protected by copyright. Copying for private or commercial purposes, in part or in whole, is not permitted unless authorised by Volkswagen AG. Volkswagen AG does not guarantee or accept any liability with respect to the correctness of information in this document. Copyright by Volkswagen AG.

2.2 - Servicing accelerator mechanism

1 Accelerator cable
- Adjusting => Page 138
- Do not reuse damaged accelerator cable, replace

2 Retaining clip
- Adjusting throttle cable => Page 138

3 Balance weight
4 Accelerator pedal
5 Spacer sleeve
6 Bush
7 Washer
8 Stop bolt
9 20 Nm

satelettronica

2.3 - Adjusting throttle cable

Work sequence

- Hook accelerator cable into accelerator pedal and cam disk on throttle valve control part.
- Pull off retaining clip for accelerator cable core wire.
- Depress accelerator pedal to full throttle position.

Vehicles with manual gearbox

- Adjust accelerator cable by moving the retainer at the support bracket, so that the full throttle position is attained at the throttle valve control part.

Vehicles with automatic gearbox

- Adjust accelerator cable by moving the retainer at the support bracket, so that the full throttle position is attained at the throttle valve control part and the kick-down switch clicks audibly.
- Release accelerator pedal or remove pedal depressor.
- Check idling speed and full throttle stops on throttle valve after adjusting.

Protected by copyright. Copyright by Volkswagen AG. Volkswagen AG does not guarantee or accept any liability with respect to the correctness of information in this document. Copyright by Volkswagen AG. Reproduced by Volkswagen AG. Unauthorised use is not permitted. Copying for private or commercial purposes, in part or in whole, is not permitted.

3 - Activated charcoal filter system

3.1 - Activated charcoal filter system

Notes:

- Hose connections are secured with either spring-type or clamp-type clips.
- Always replace clamp-type clips with spring-type clips.
- V.A.G 1921 pliers are recommended when installing spring-type clips.

Observe safety precautions=> Page 127 .

Observe rules for cleanliness => Page 127 .

satelettronica

3.2 - Removing and installing parts of the activated charcoal filter system

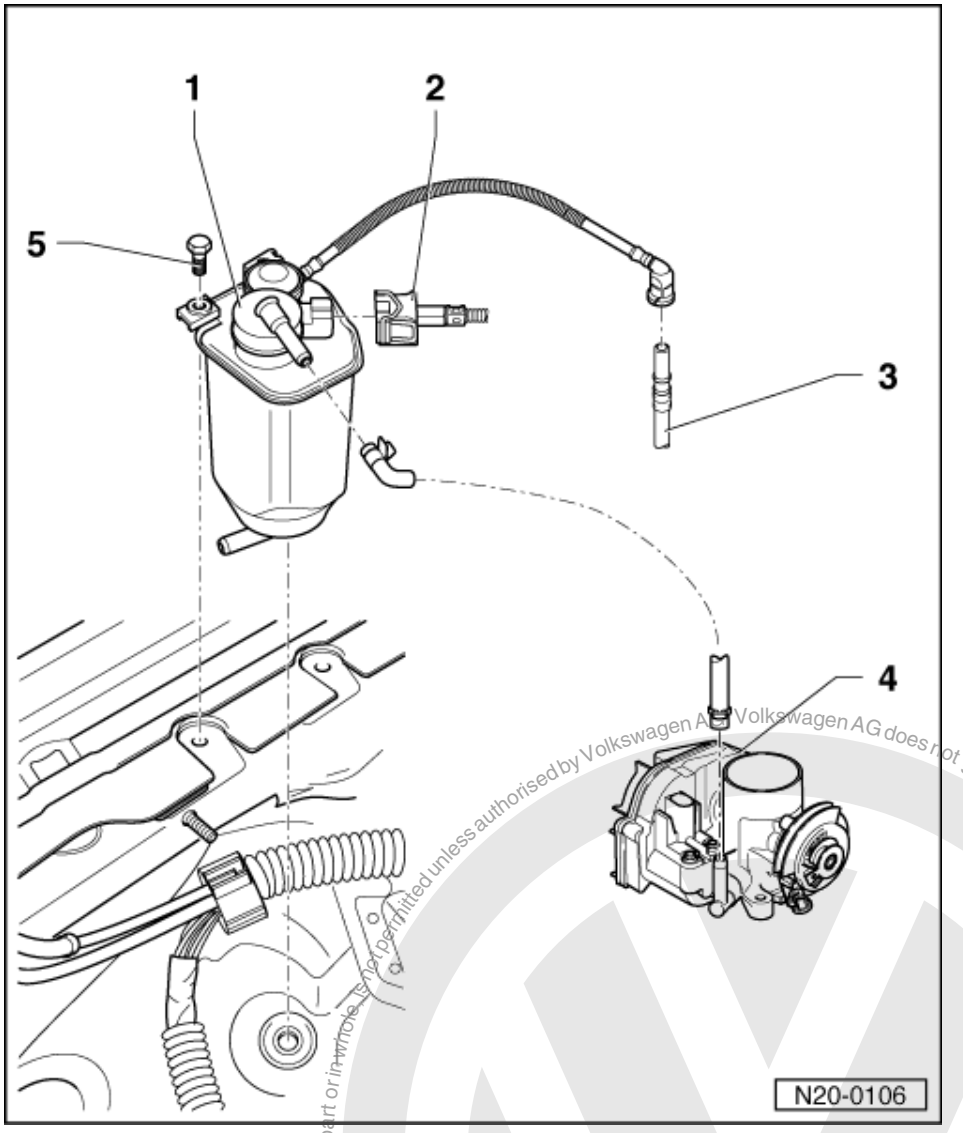

1 Activated charcoal filter

- Location: Right in engine compartment
- Secured to body
- With solenoid valve 1 for activated charcoal filter (N80)
- When the engine is warm the valve will be activated from the engine control unit (pulsed)
- Checking:

=> Repair group 01; Final control diagnosis; Performing final control diagnosis Final control diagnosis Performing final control diagnosis

2 Connector

- Black, 2-pin
- For solenoid valve 1

Protected by copyright. Copying for private or commercial purposes, in part or in whole, is not permitted unless authorised by Volkswagen AG. Volkswagen AG does not guarantee or accept any liability with respect to the correctness of information in this document. Copyright by Volkswagen AG.
satelettronica

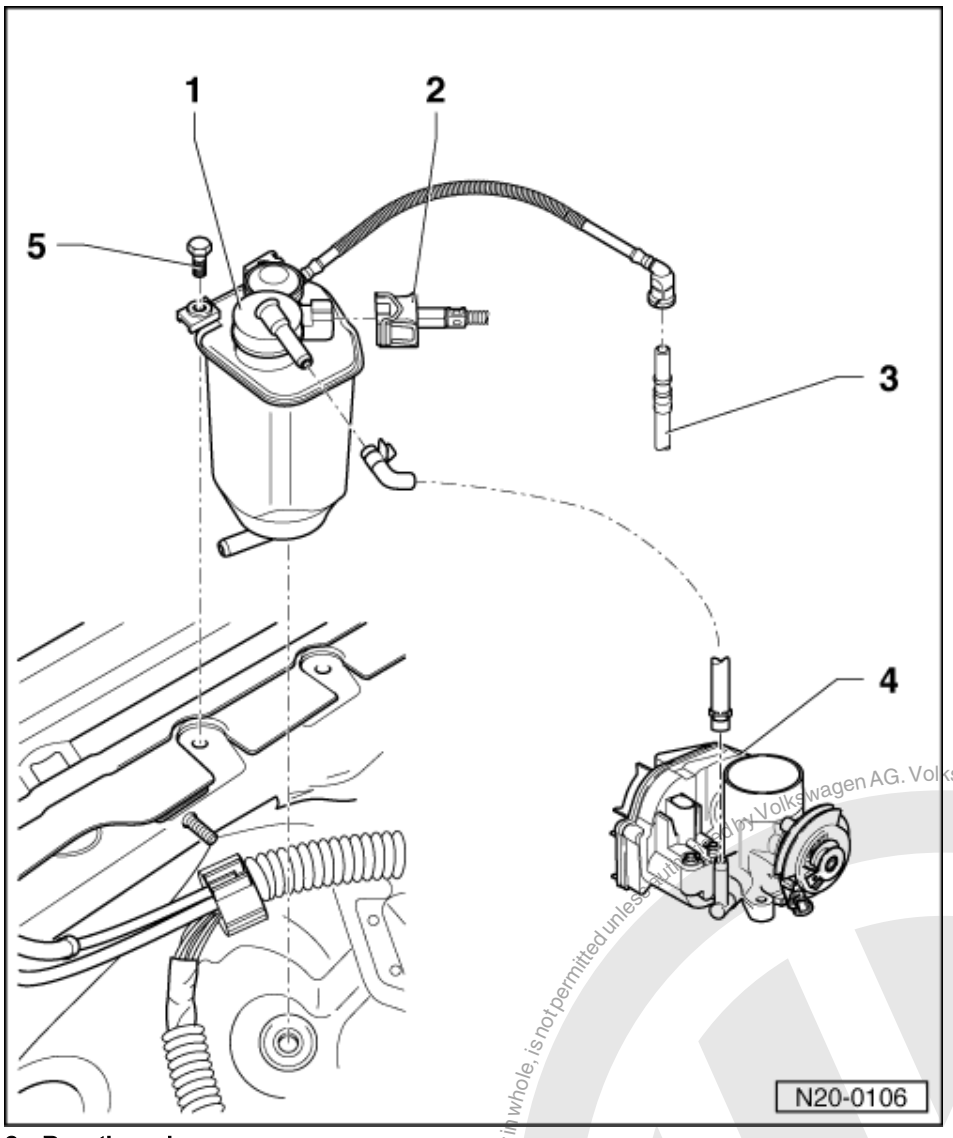

3 Breather pipe
- From gravity/overflow valve on fuel tank
  => Page 122 , Item 3

4 Throttle valve control part

5 10 Nm

Protected by copyright. Copying for private or commercial purposes, in part or in whole, is not permitted unless authorised by Volkswagen AG. Volkswagen AG does not guarantee or accept any liability with respect to the correctness of information in this document. Copyright by Volkswagen AG.
satelettronica

3.3 - Checking fuel tank breather

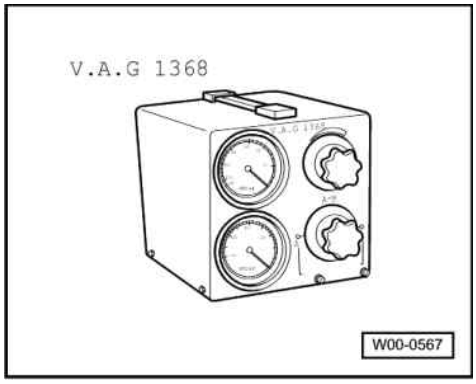

Special tools, workshop equipment, testers, measuring instruments and auxiliary items required

- V.A.G 1368 Vacuum tester

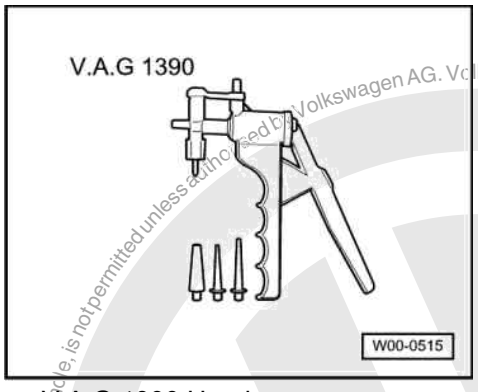

- V.A.G 1390 Hand vacuum pump

Test sequence

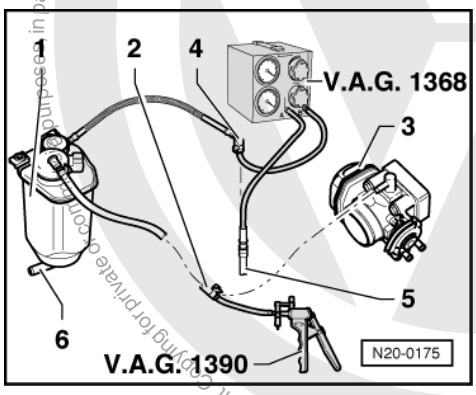

- -> Pull breather pipe/hose -2- from activated charcoal filter -1- off at throttle valve control part -3-.
- Connect hand vacuum pump V.A.G 1390 to pipe/hose -2-.
- Pull breather pipe/hose -5- from fuel tank off activated charcoal filter and connect to -connection A- of vacuum tester V.A.G 1368.
- Connect vacuum tester V.A.G 1368 -connection B- to breather pipe/hose -4-.
- Set vacuum tester to position -B-.
- Introduce final control diagnosis and select activated charcoal filter solenoid valve (N80):

=> Repair group 01; Final control diagnosis; Performing final control diagnosis Final control diagnosis Performing final control diagnosis

- Operate hand vacuum pump V.A.G 1390 several times.
  Vacuum must not

satelettronica

build up.

If vacuum builds up:

- Check breather connection -6- on activated charcoal filter -1- for soiling, clean if necessary.

If vacuum does not build up:

- Remove fuel filler cap.

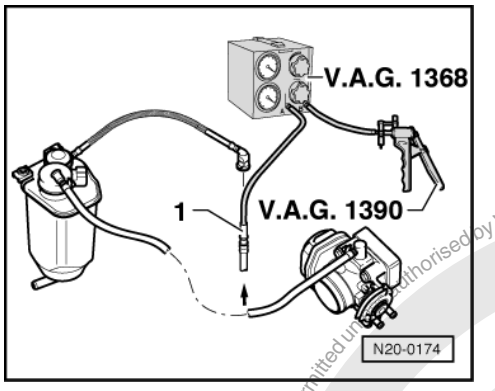

- -> Connect hand vacuum pump V.A.G 1390 to vacuum tester V.A.G 1368 -connection B-.
- Set vacuum tester to -A/B- position.
- Operate V.A.G 1390 several times. Vacuum must not build-up.

If vacuum builds-up:

- Check gravity valve => Page 122 , Item 5.
- Check pipe/hose -1- from fuel tank for blockage.

If vacuum does not build up:

- Refit fuel filler cap.
- Operate hand vacuum pump V.A.G 1390 several times. Vacuum must not build up.

Note:

If the fuel level in the tank is low the hand vacuum must be operated at least 20...30 times.

If vacuum builds up:

- Replace fuel tank cap.

Protected by copyright. Copyright by Volkswagen AG.
Copyright by Volkswagen AG. Volkswagen AG does not guarantee or accept any liability with respect to the correctness of information in this document.
satelettronica

26 - Exhaust system

1 - Removing and installing parts of exhaust system

1.1 - Removing and installing parts of exhaust system

Notes:

- After working on the exhaust system ensure that the system is not under stress, and that it has sufficient clearance from the bodywork. If necessary, loosen double and single clamps and align silencer and exhaust pipe so that sufficient clearance is maintained to the bodywork and the support rings are evenly loaded.
- Renew self-locking nuts.

1.2 - Exhaust manifold, front exhaust pipe and catalyst with attachments

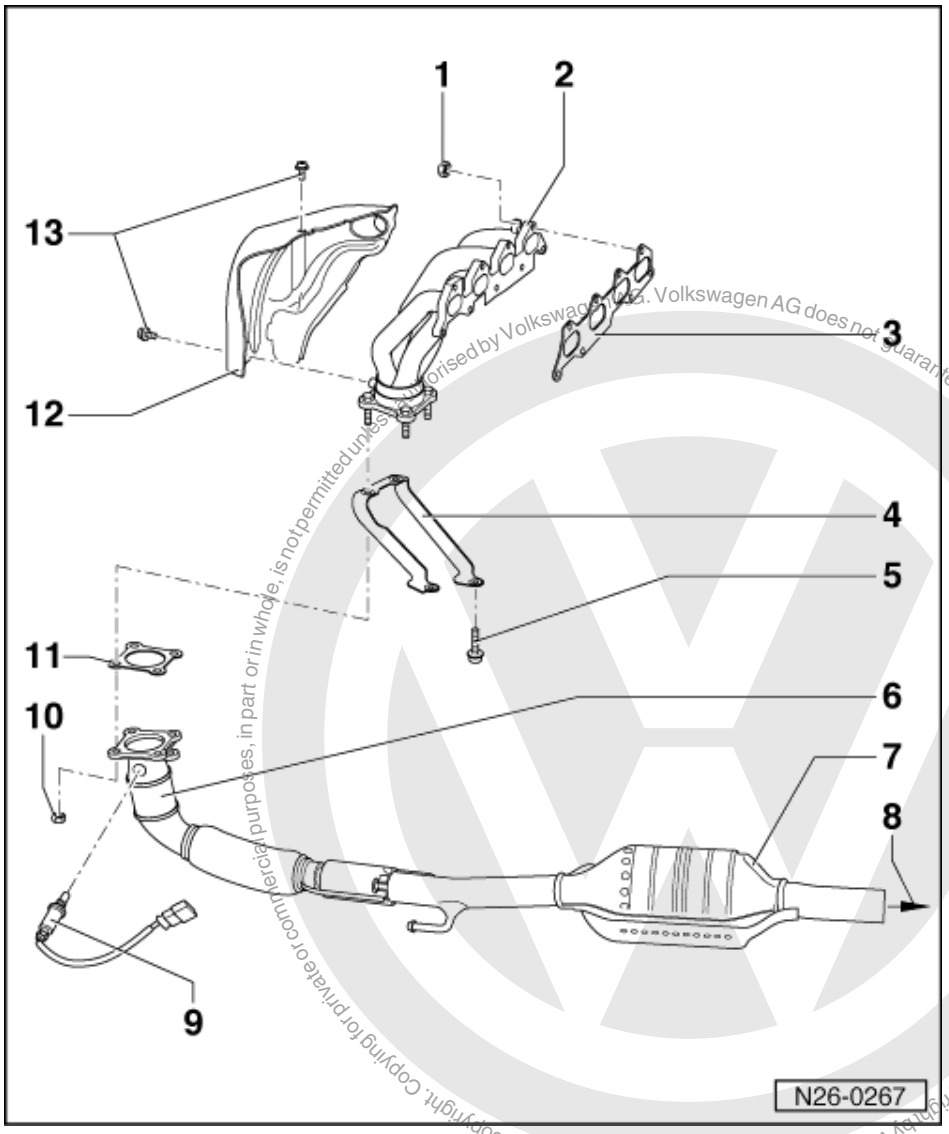

1 Lock nut, 25 Nm
2 Exhaust manifold

satelettronica
Protected by copyright. Copying for private or commercial purposes, in part or in whole, is not permitted unless authorised by Volkswagen AG. Volkswagen AG does not guarantee or accept any liability with respect to the correctness of information in this document. Copyright by Volkswagen AG.

3 Gasket
- Renew

4 Bracket
5 20 Nm
6 Micro catalyst
7 Front exhaust pipe with catalyst
8 To silencer

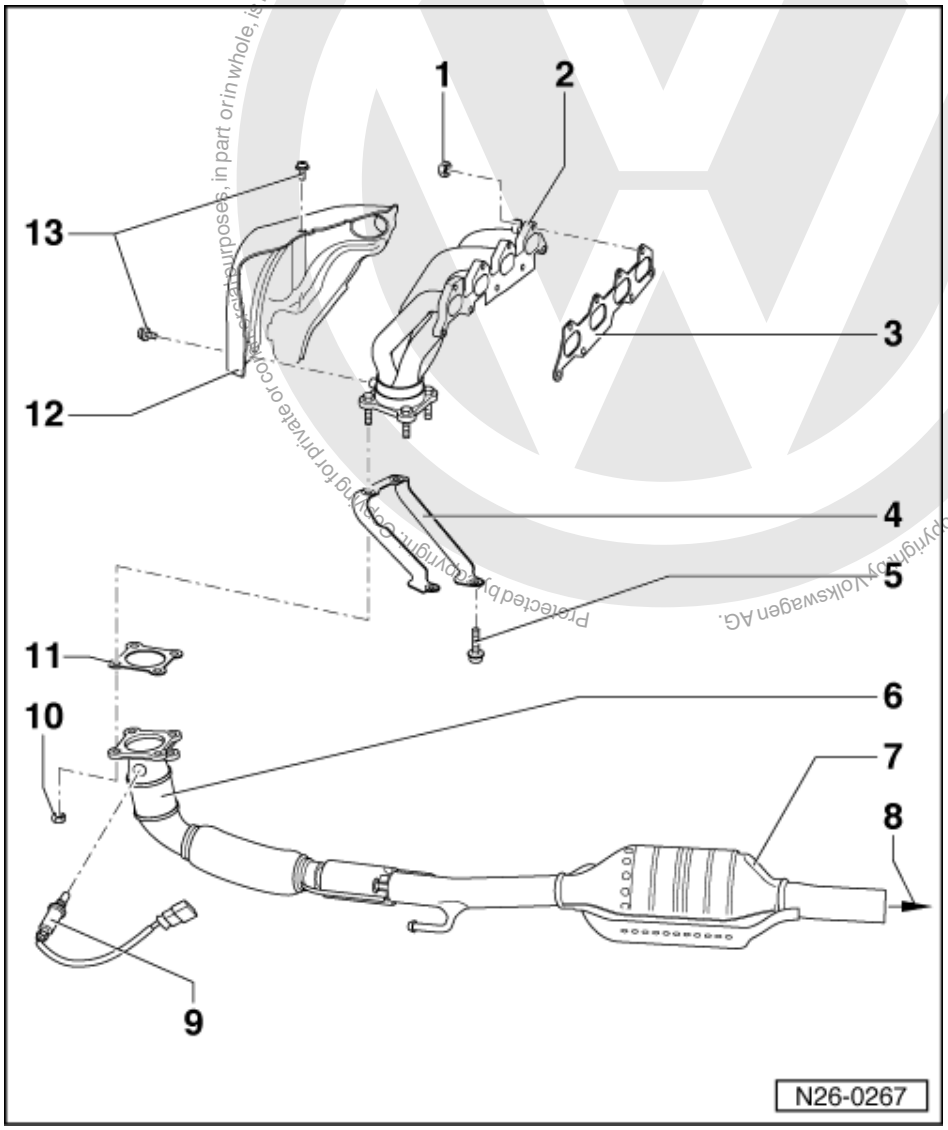

9 Lambda probe, 55 Nm
- Grease only the threads with "G5"; "G5" must not get into the slots on the probe body
- Remove and install with 3337
- Checking:

=> Repair group 24; Checking function; Checking Lambda probe and Lambda regulation Checking function Checking Lambda probe and Lambda regulation

10 40 Nm
11 Gasket
- Renew

12 Heat shield
13 10 Nm

Protected by copyright. Copying for private or commercial purposes, in part or in whole, is not permitted unless authorised by Volkswagen AG. Volkswagen AG does not guarantee or accept any liability with respect to the correctness of information in this document. Copyright by Volkswagen AG.

satelettronica

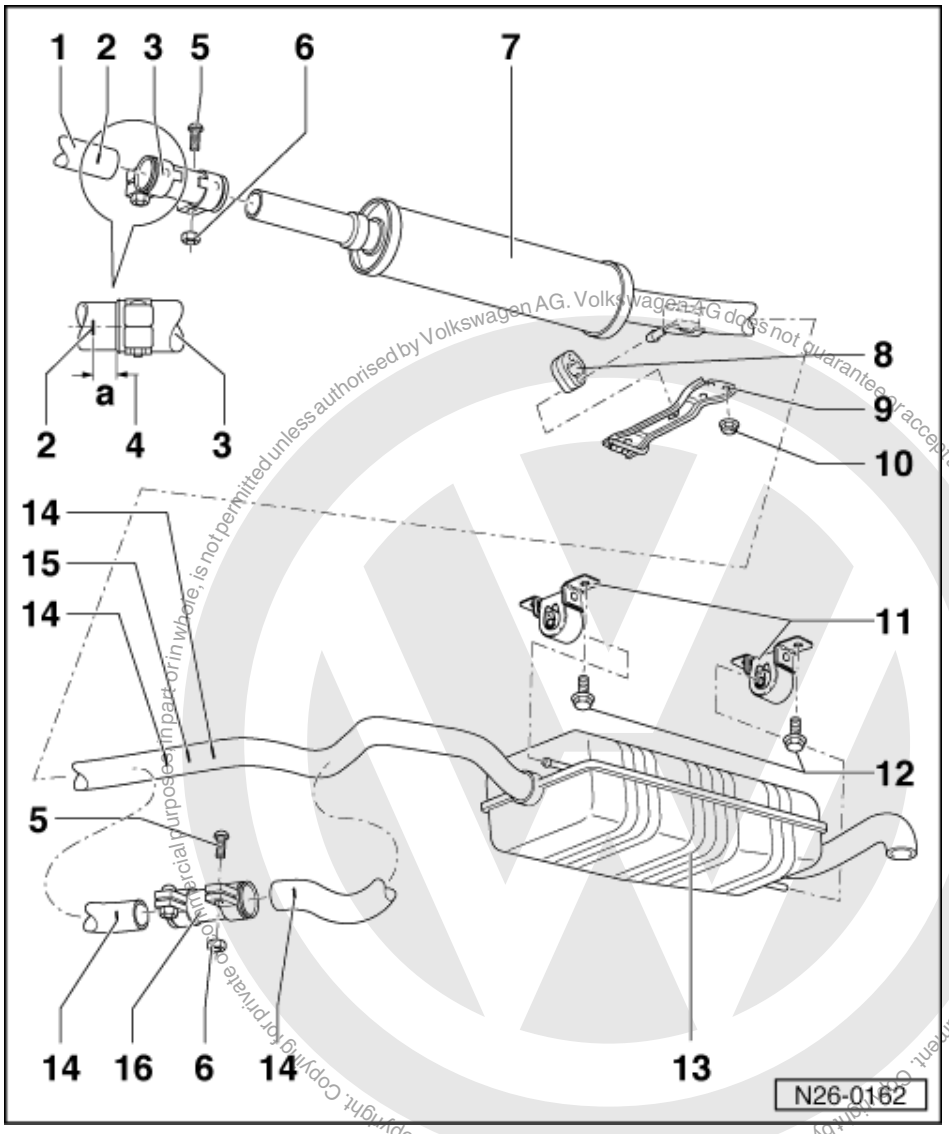

Protected by copyright. Copying for private or commercial purposes, in part or in whole, is not permitted unless authorised by Volkswagen AG. Volkswagen AG does not guarantee or accept any liability with respect to the correctness of information in this document. Copyright by Volkswagen AG.

satelettronica

Silencer with mountings

1 Front exhaust pipe
2 Marking
- Three times on circumference

3 Double clamp
4 Dimension-a- = ca. 5 mm
5 Carriage bolt
6 M8: 25 Nm
M10: 40 Nm
7 Front silencer1)
8 Mounting
- Renew if damaged

9 Connecting piece
10 15 Nm
11 Mounting

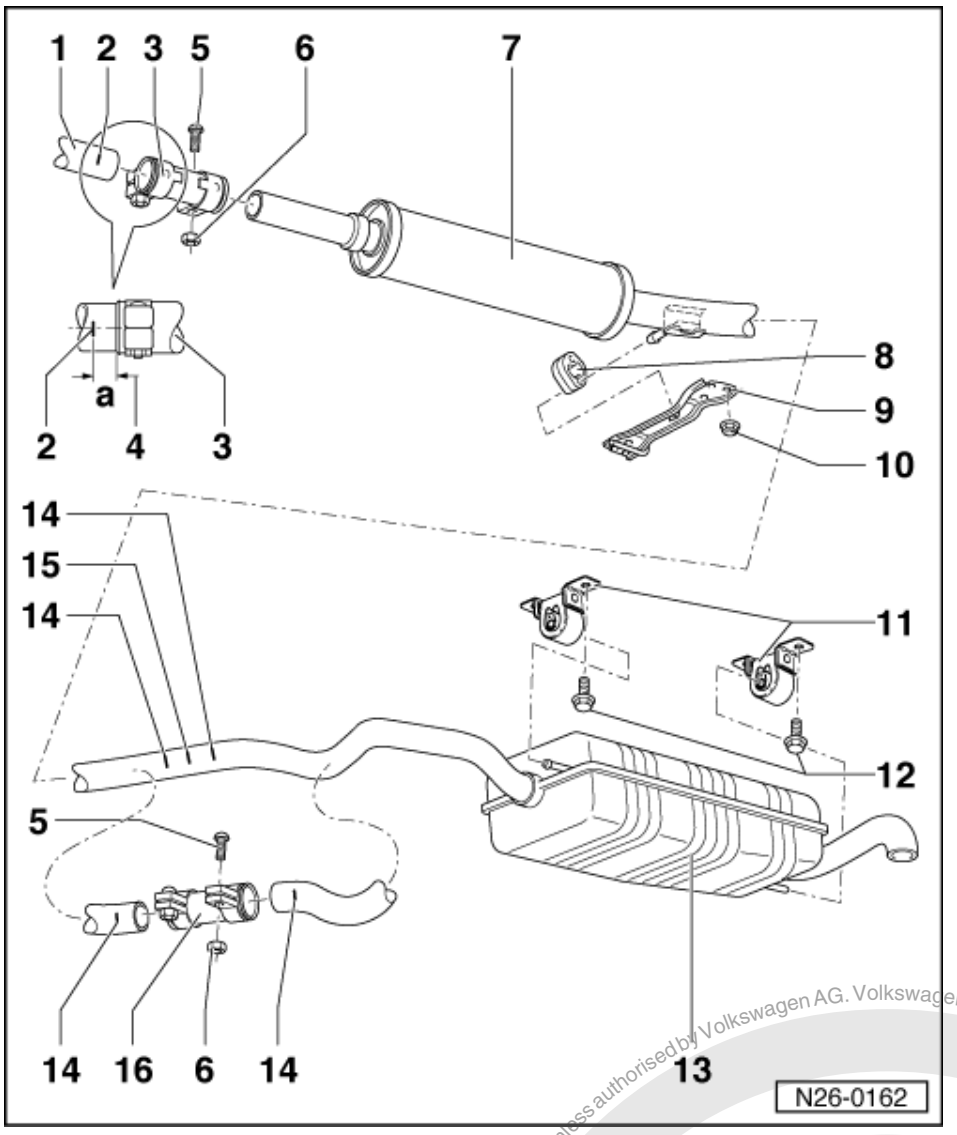

12 20 Nm + 1/4 turn (90 °) further
13 Rear silencer1)
14 Marking
- Visible from below
- Double clamp - 16 - for repairs

15 Separating point
- For repair cases1)
- Marked by indentation on connecting pipe

16 Repair double clamp
- Must be slid onto the markings - 14 -

Protected by copyright. Copying for private or commercial purposes, in part or in whole, is not permitted unless authorised by Volkswagen AG. Volkswagen AG does not guarantee or accept any liability with respect to the correctness of information in this document. Copyright by Volkswagen AG.
satelettronica

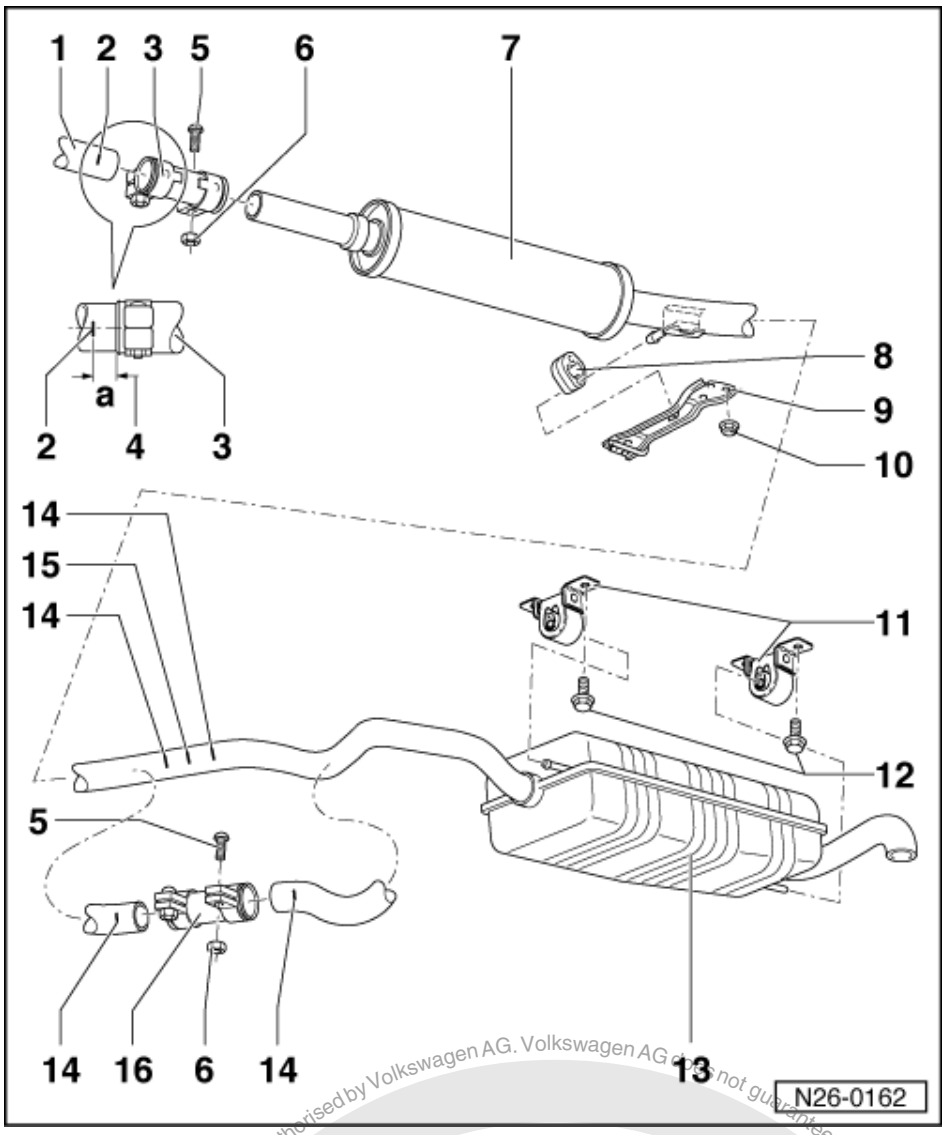

1) Front and rear silencers are installed as a single component as standard. In repair cases the front and rear silencers are supplied individually and a repair double clamp item 16 is supplied as a joint. Cut through connecting pipe at separating point - 15 - with a body saw e.g. V.A.G 1523.

satelettronica
Protected by copyright. Copying for private or commercial purposes, in part or in whole, is not permitted unless authorised by Volkswagen AG. Volkswagen AG does not guarantee or accept any liability with respect to the correctness of information in this document. Copyright by Volkswagen AG.